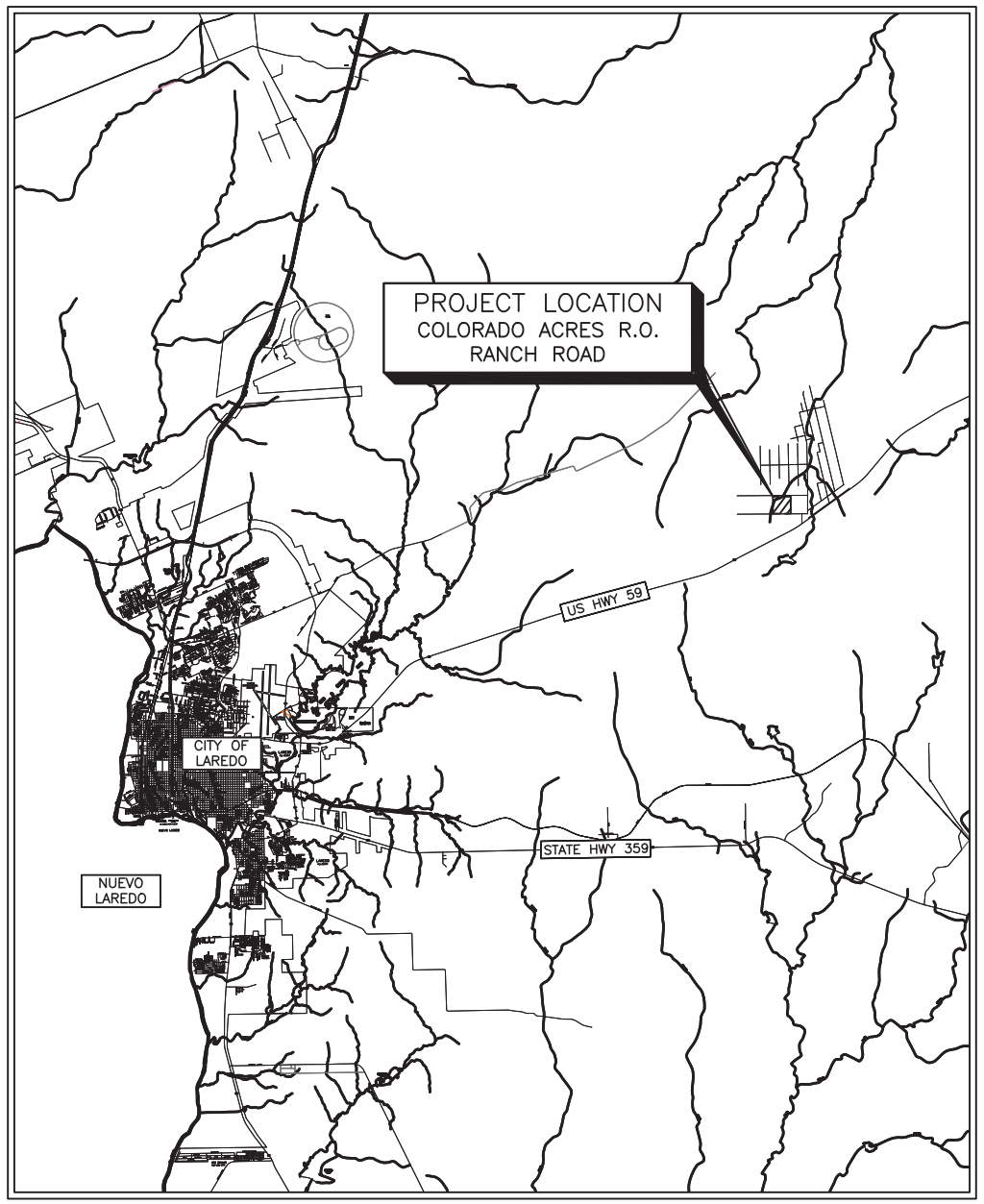

LOCATION MAP

WEBB COUNTY

COLORADO ACRES R.O. SITE IMPROVEMENTS (PHASE 1)

SHEET INDEX	
SHT NO.	DESCRIPTION
1	COVER SHEET
2	LOCATION MAP QUANTITIES SUMMARY & LEGEND
3	GENERAL NOTES (1 OF 2)
4	EXISTING SITE PLAN
5	PROPOSED SITE PLAN IMPROVEMENTS
6	PROPOSED SITE DRAINAGE IMPROVEMENTS
7	MISCELLANEOUS DETAILS (1 OF 2)
8	MISCELLANEOUS DETAILS (2 OF 2)
9	WATER DETAILS (1 OF 2)
10	WATER DETAILS (2 OF 2)
11	BACKFILL DETAILS
12	STORM WATER POLLUTION PREVENTION (1 OF 2)
13	STORM WATER POLLUTION PREVENTION (2 OF 2)

COUNTY JUDGE
TANO E. TIJERINA

COMMISSIONERS

FRANK SCIARAFFA	PRECINCT I
ROSAURA "WAWI" TIJERINA	PRECINCT II
JOHN GALO	PRECINCT III
JAIME CANALES	PRECINCT IV

COUNTY ENGINEER
LUIS PEREZ GARCIA, PE, CFM

PREPARED BY:

LNV
TBPE FIRM NO. F-366
TBPLS FIRM NO. 10126500
engineers | architects | surveyors
6010 MCPHERSON, SUITE 110
LAREDO, TX 78041
PH. (956) 462-5511
WWW.LNVINC.COM

CALL BEFORE YOU DIG!

Texas 811 Know what's below. Call before you dig.

PARTICIPANTS REQUEST 48 HOURS NOTICE BEFORE YOU DIG, DRILL, OR BLAST – STOP AND CALL

811

THE LONE STAR NOTIFICATION COMPANY AT 1-800-669-8344

COUNTY ENGINEER
LUIS PEREZ GARCIA, PE, CFM

DATE

SYSTEMS MANAGER
ADRIAN MONTEMAYOR

DATE

THE DOCUMENT IS FOR INTERIM REVIEW AND IS NOT INTENDED FOR CONSTRUCTION, BIDDING, PERMIT OR OTHER UNAUTHORIZED PURPOSES. THESE DOCUMENTS/PLANS WERE AUTHORIZED TO BE RELEASED.
BY: ENRIQUE VALDEZ P.E.
LICENSE NO.: 111750 DATE: 6/24/16

ISSUES / REVISIONS

DATE	NO.	DESCRIPTION	BY

WEBB COUNTY, TEXAS
COLORADO ACRES RO PHASE 1 PROJECT

COVER SHEET

LNV
TBPE FIRM NO. F-366
TBPLS FIRM NO. 10126500
engineers | architects | surveyors
6010 MCPHERSON, SUITE 110
LAREDO, TX 78041
PH. (956) 462-5511
WWW.LNVINC.COM

DRAWING NO. 1 of 13

DRAWN BY:	E.F.
CHECKED BY:	E.V.
APPROVED BY:	E.V.
JOB NO:	160149

\\HRG-STORAGE\Projects\Colorado Acres\1 COVER SHEET.dwg
Friday, June 24, 2016, 3:13pm

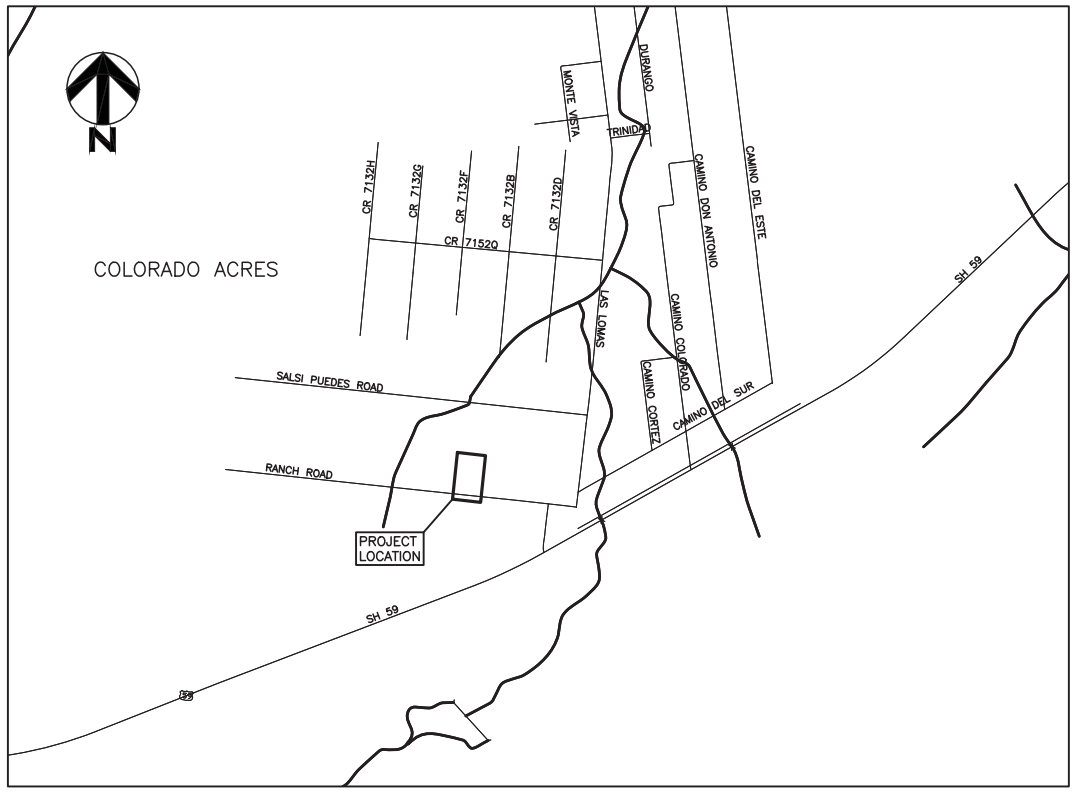

COLORADO ACRES R.O. (PHASE 1) BASE BID

SCALE: NTS

TESTING SCHEDULE

DESCRIPTION	RATE
SOILS:	
STANDARD PROCTOR – TRENCH BACKFILL	PER MATERIAL SOURCE
STANDARD PROCTOR – RAW SUBGRADE	PER STREET
DENSITIES – TRENCH BACKFILL	PER 500 LF PIPE
DENSITIES – RAW SUBGRADE	PER 100 LF STREET
DENSITIES – DRIVEWAYS	PER 5 DRIVEWAYS
BASE:	
SIEVE ANALYSIS	PER 300 LF STREET
ATTERBERG LIMITS	PER 300 LF STREET
MODIFIED PROCTOR	PER MATERIAL CHANGE
DENSITIES OF COMPACTED BASE	PER 300 LF STREET
WET BALL MILL TEST	PER MATERIAL SOURCE
TRIAXIAL TEST	PER MATERIAL SOURCE
HOT–MIX ASPHALT CONCRETE (HMAC):	
EXTRACTION, SIEVE ANALYSIS	PER 500 TONS OR DAY
LAB DENSITY & STABILITY	PER 500 TONS OR DAY
THEORETICAL DENSITY (RICE METHOD)	PER 500 TONS OR DAY
TEMPERATURE – DURING LAY–DOWN	CONTINUOUS AS NEEDED
THICKNESS – IN PLACE	PER 300 LF STREET
% AIR VOIDS – IN PLACE	PER 300 LF STREET
% THEORETICAL DENSITY – IN PLACE	PER 300 LF STREET

GENERAL ABBREVIATIONS

	@	AT (MEASUREMENT)
A	APPROX	APPROXIMATE
	ASTM	AMERICAN SOCIETY FOR TESTING AND MATERIALS
	ASSY	ASSEMBLY
	AVG	AVERAGE
	AIP	ABANDONED IN PLACE
B	BLDG	BUILDING
C	CC	CENTER OF CURVATURE, CENTER TO CENTER
	CF	CUBIC FEET
	CFM	CUBIC FEET PER MINUTE
	CFS	CUBIC FEET PER SECOND
	CI	CAST IRON
	CIP	CAST IRON PIPE
	CJ	CONTROL JOINT
	CL or ℄	CENTER LINE
	CLR	CLEAR
	CO	CLEAN OUT
	CONC	CONCRETE
	CRS	COURSE
	CY	CUBIC YARD
D	DB	DUCT BANK
	DEG or °	DEGREE
	DIA or ø	DIAMETER
	DIM	DIMENSION
	DIP	DUCTILE IRON PIPE
	DI	DUCTILE IRON
	DWG(S)	DRAWING(S)
E	EFF	EFFLUENT
	EFM	EFFLUENT FORCE MAIN
	EL	ELEVATION
	EXIST or EX	EXISTING
	EAE	ENGINEER APPROVED EQUAL
F	FG	FINISH GRADE
	FH	FIRE HYDRANT
	FT or '	FOOT, FEET
	FM	FORCEMAIN
G	GA	GAUGE or GAGE
	GAL	GALLONS
	GALV	GALVANIZE(D) GALVANIZED
	GB	GRADE BREAK
	GPM	GALLONS PER MINUTE
H	HDG	HOT DIPPED GALVANIZED
	HGL	HYDRAULIC GRADE LINE
	HP	HORSEPOWER, HIGH PRESSURE
	HWL	HIGH WATER LEVEL
I	ID	INSIDE DIAMETER, INSIDE DIMENSION
	IN or "	INCHES
	INV	INVERT
J	JB	JUNCTION BOX
L	LB(S)	POUNDS
	LF	LINEAL FEET
	LG	LONG
	LS	LIFT STATION
	LT	LEFT
	LWL	LOW WATER LEVEL
M	MFR	MANUFACTURER
	MGD	MILLION GALLONS PER DAY
	MH	MANHOLE
	MIN	MINIMUM
	MISC	MISCELLANEOUS
	MJ	MECHANICAL JOINT
N	N	NORTH
	NO, #	NUMBER
	NTS	NOT TO SCALE
	NPW	NONPOTABLE WATER
O	OHP	OVERHEAD POWER
	OCST	ONE COURSE SURFACE TREATMENT
	OD	OUTSIDE DIAMETER, OUTSIDE DIMENSION
P	PL	PROPERTY LINE
	PI	POINT OF INTERSECTION
	PP	POWER POLE
	PSI	POUNDS PER SQUARE INCH
	PT	POINT OF TANGENCY
	PVC	POLYVINYL CHLORIDE
	PVMT	PAVEMENT
	PROP	PROPOSED
Q	QTY	QUANTITY
R	ROW	RIGHT OF WAY
	RCP	REINFORCED CONCRETE PIPE
	REINF	REINFORC(ED)(ING)(EMENT)
	RT	RIGHT
	RTU	REMOTE TERMINAL UNIT
S	S	SOUTH
	SHT	SHEET
	SL	SLOPE
	SY	SQUARE YARDS
	SPEC	SPECIFICATION
	SS	STAINLESS STEEL OR SANITARY SEWER
	STA	STATION
	STD(S)	STANDARDS(S)
T	TCE	TEMPORARY CONSTRUCTION EASEMENT
	TOC	TOP OF CONCRETE
	TYP	TYPICAL
U	UG	UNDERGROUND ELECTRIC
	UE	UTILITY EASEMENT
V	VAR	VARIES
	VCP	VITRIFIED CLAY PIPE
W	WWTP	WASTEWATER TREATMENT PLANT

TOTAL ESTIMATED QUANTITIES SUMMARY (BASE BID)

ITEM	DESCRIPTION	UNIT	TOTAL QUANTITIES BASE BID
	COLORADO ACRES R.O. (PHASE 1)		
1	MOBILIZATION	LS	1
2	WELDED STEEL GROUND WATER STORAGE TANK (40,000 GAL) W/FOUNDATION	LS	1
3	DUAL WATER DISPENSER UNIT	LS	1
4	6" SAFETY BOLLARD W/3" GUARD RAIL	EA	8
5	CONCRETE PAVING	SY	805
6	5FT CONCRETE VALLEY GUTTER	LF	20
7	FEED PUMP SKID W/ CHECK VALVES/CONTROLS/REDUCERS	EA	1
8	3" WATER DISPENSER LINE	LF	200
9	3" 90° BEND	EA	2
10	3" ISOLATION VALVE	EA	2
11	3" TEE	EA	1
12	EXISTING DETENTION POND RE–GRADE	LS	1
13	4 STRAND BARBWIRE FENCE (GATE INCLUDED)	LF	1200
14	ELECTRICAL RETROFITTING DISPENSER/GROUND STORAGE TANK/FEED PUMP	LS	1
15	EROSION CONTROL	LS	1
16	TRAFFIC CONTROL	LS	1

TOTAL ESTIMATED QUANTITIES SUMMARY (DEDUCTIVE ALT. NO. 1)

ITEM	DESCRIPTION	UNIT	TOTAL QUANTITIES DEDUCTIVE ALT NO. 1
	COLORADO ACRES R.O. (PHASE 1)		
1	DUAL WATER DISPENSER UNIT	LS	1
2	6" SAFETY BOLLARD W/3" GUARD RAIL	EA	8
3	FEED PUMP SKID W/ CHECK VALVES/CONTROLS/REDUCERS	EA	1
4	3" WATER DISPENSER LINE	LF	200
5	3" 90° BEND	EA	2
6	3" ISOLATION VALVE	EA	2
7	3" TEE	EA	1
8	EXISTING DETENTION POND RE–GRADE	LS	1
9	4 STRAND BARBWIRE FENCE (GATE INCLUDED)	LF	1200
10	ELECTRICAL RETROFITTING DISPENSER/GROUND STORAGE TANK/FEED PUMP	LS	1

NOTE:

- ALL QUANTITIES ARE FOR INFORMATIONAL PURPOSES ONLY.

TYPICAL LEGEND/SYMBOLS

PROPOSED LINETYPES

- S — SEWER LINE
- W — WATER LINE
- AC — ASBESTOS–CEMENT PIPE
- G — GAS LINE
- T — TELEPHONE LINE
- OHP — OVERHEAD POWER
- UT — UNDERGROUND TELEPHONE
- UE — UNDERGROUND ELECTRIC
- X — CHAINLINK FENCE
- WOOD FENCE
- PL — PROPERTY LINE
- TOB — TOP OF BANK
- FO — FIBER OPTICS
- DIP — DUCTILE IRON PIPE
- BUILDING
- CL of DITCH
- RCP — STORM SEWER PIPE
- ROW — RIGHT OF WAY
- CONSTRUCTION EASEMENT
- UTILITY EASEMENT
- W — PROP WATERLINE
- EXIST ASPHALT
- EXIST GRAVEL
- EXIST CONCRETE
- EXIST BRICK
- PROP ASPHALT REPAIR
- PROP BASE REPAIR
- PROP CONCRETE REPAIR
- PROP ASPHALT
- PROP CONCRETE

- CONTROL POINT
- PROJECT BENCH MARK
- PLUG
- CONNECTION
- FIRE HYDRANT
- MONUMENT/POST
- GRATE INLET
- GAS METER
- SANITARY SWR MH
- WATER METER
- STORM SWR MH
- SIGN
- WATER METER
- IRON ROD
- 94.00 × SPOT ELEVATIONS
- TREE
- SHRUB
- GUY ANCHOR
- POWER POLE
- WATER VALVE
- GAS VALVE
- CLEANOUT
- LIGHT POLE
- NORTH ARROW

DETAIL/SECTION ID SYSTEM

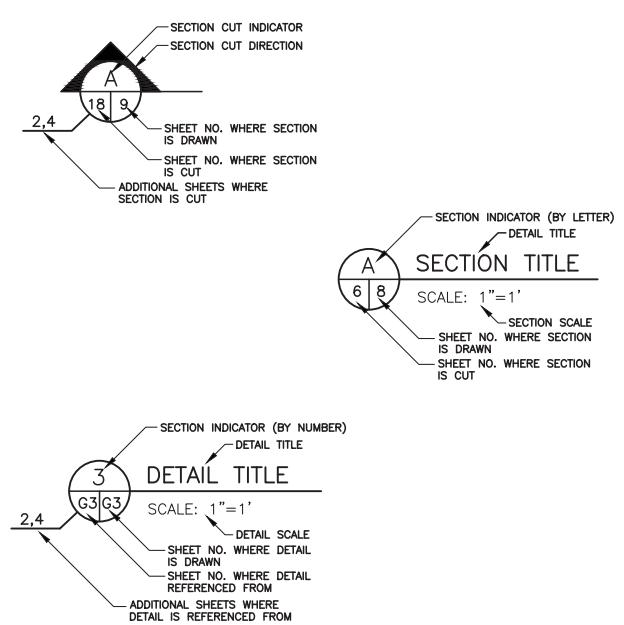

THIS DOCUMENT IS FOR INTERIM REVIEW AND IS NOT INTENDED FOR CONSTRUCTION, BIDDING, PERMIT OR OTHER UNAUTHORIZED PURPOSES. THESE DOCUMENTS/PLANS WERE AUTHORIZED TO BE RELEASED.
BY: ENRIQUE VALDEZ P.E.
LICENSE NO.: 111750 DATE: 6/24/16

ISSUES / REVISIONS

DATE	NO.	DESCRIPTION	BY

WEBB COUNTY, TEXAS
COLORADO ACRES RO PHASE 1 PROJECT

LOCATION MAP QUANTITIES SUMMARY & LEGEND

TBPE FIRM NO. F-366
TBPLS FIRM NO. 101285500
engineers | architects | surveyors
6310 MCPHERSON, SUITE 110
LAREDO, TX 78041
PH. (956) 462-5511
WWW.LNVINC.COM

DRAWING NO. 2 of 13

DRAWN BY:	E.F.
CHECKED BY:	E.V.
APPROVED BY:	E.V.
JOB NO:	160149

\\HELSTORAGE\Projects\Colorado Acres\2 LOCATION MAP QUANTITIES SUMMARY & LEGEND.dwg
Friday, June 24, 2016 10:54am

PROJECT SCOPE

1. THE PROJECT CONSISTS OF THE PROPOSED SITE IMPROVEMENTS FOR THE COLORADO ACRES REVERSE OSMOSIS WATER TREATMENT PLANT AS FOLLOWS: REMOVE/DEMOLISH EXISTING ASPHALT/CONCRETE DRIVEWAY, INSTALLATION OF ASPHALT/CONCRETE DRIVEWAY, INSTALLATION OF 1,200 LF OF SECURITY FENCING, INSTALLATION OF A DUAL WATER DISPENSER, INSTALLATION OF A 40,000 GALLON GROUND STORAGE TANK W/ ALL THE APPROPRIATE YARD PIPING, AND OTHER COMPONENTS.

SPECIAL RESTRICTIONS FOR SEQUENCING WORK

1. DRIVEWAY CONSTRUCTION SHALL BEGIN WITHIN 2 DAYS OF COMPLETING CURB & GUTTER.
2. H.M.A.C.P. BASE COURSE SHALL FOLLOW COMPLETED FLEXIBLE BASE COURSE WITHIN 5 DAYS.
3. UTILITIES TO BE ABANDONED SHALL BE MAINTAINED BY THE CONTRACTOR AND REMAIN IN SERVICE UNTIL THE APPROPRIATE SERVICE CHANGEOVERS HAVE BEEN COMPLETED BY THE CONTRACTOR AND ACCEPTED FOR USE BY THE APPROPRIATE OPERATING DEPARTMENT.
4. CONTRACTOR SHALL PROVIDE AND MAINTAIN SUITABLE TEMPORARY STORM WATER DRAINAGE CONDUITS ACROSS ALL DETOURS AND INTERSECTIONS DURING VARIOUS PHASES OF THE WORK, AND SHALL PROVIDE AND MAINTAIN SUITABLE TEMPORARY STORM WATER DRAINAGE CONDUITS AND/OR DITCHES ALONG THE DETOUR AND ROADWAY AS REQUIRED TO PREVENT FLOODING AND PROMOTE POSITIVE RUNOFF FROM THE SITE. SUCH TEMPORARY STORM WATER DRAINAGE DEVICES SHALL BE MAINTAINED UNTIL SUCH TIME THAT PERMANENT STORM WATER DRAINAGE STRUCTURES AND CONDUITS ARE COMPLETED. THESE TEMPORARY DRAINAGE DEVICES WILL NOT BE PAID FOR DIRECTLY BUT SHALL BE CONSIDERED SUBSIDIARY WORK.
5. EXISTING ASBESTOS–CEMENT WATERLINES MAY BE REMOVED OR GROUTED & ABANDONED IN PLACE, AT THE CONTRACTOR'S OPTION. HOWEVER, THERE ARE SOME AREAS WHERE THE EXISTING WATERLINE MUST BE REMOVED IN ORDER TO ACCOMMODATE CONSTRUCTION OF THE PROPOSED IMPROVEMENTS.
6. ALL ASBESTOS–CEMENT PIPE DESIGNATED FOR REMOVAL SHALL BE DISPOSED OF IN STRICT COMPLIANCE WITH LOCAL, STATE AND FEDERAL REGULATIONS. DISPOSAL OF ASBESTOS–CEMENT PIPE WILL NOT BE PAID FOR DIRECTLY BUT SHALL BE CONSIDERED SUBSIDIARY WORK.

GENERAL CONSTRUCTION NOTES

1. TREE TRIMMING SHALL BE DONE IN ACCORDANCE WITH STANDARD HORTICULTURAL PRACTICE. TREES, TREE STUMPS AND BRUSH WITHIN THE R.O.W. THAT CONFLICT WITH THE PROPOSED IMPROVEMENTS SHALL BE REMOVED AND HAULED AWAY. PAYMENT FOR THIS WORK IS SUBSIDIARY TO ITEM "CLEAR RIGHT–OF–WAY".
2. FENCES SHALL BE RELOCATED PER STANDARD SPECIFICATIONS OR AS DIRECTED BY THE ENGINEER. THE CONTRACTOR SHALL NOT DISTURB FENCES ALONG THE R.O.W. THAT DO NOT ENCROACH WITHIN THE R.O.W., UNLESS DIRECTED BY THE ENGINEER AND REQUIRED FOR GRADE ADJUSTMENTS. ALL FENCES ON PRIVATE PROPERTY THAT ARE DISTURBED, REMOVED, ETC., FOR THE CONTRACTOR'S CONVENIENCE, SHALL BE REPLACED WITH LIKE–KIND OR BETTER AT THE CONTRACTOR'S EXPENSE.
3. UNLESS OTHERWISE INDICATED, REMOVAL OF EXISTING FENCE IN AREAS TO RECEIVE NEW FENCE WILL NOT BE PAID FOR DIRECTLY, BUT SHALL BE SUBSIDIARY TO THE VARIOUS BID ITEMS. THE CONTRACTOR SHALL PROVIDE A TEMPORARY FENCE FROM THE TIME AN EXISTING FENCE IS REMOVED TO THE TIME THE PROPOSED FENCE IS REPLACED. THIS WORK WILL NOT BE PAID FOR DIRECTLY BUT CONSIDERED SUBSIDIARY TO THE VARIOUS BID ITEMS.
4. ALL WORK SHALL BE PERFORMED DURING DAYLIGHT HOURS.
5. ALL PROPOSED EASEMENTS AND RIGHTS–OF–WAY FOR THIS PROJECT WILL BE ACQUIRED PRIOR TO BEGINNING CONSTRUCTION UNLESS INDICATED OTHERWISE IN THE PLANS OR CONSTRUCTION DOCUMENTS.
6. THE CONTRACTOR SHALL BE RESPONSIBLE FOR PROCURING ALL LEGALLY REQUIRED PERMITS AND LICENSES, PAY ALL CHARGES AND FEES, GIVE ALL NOTICES NECESSARY AND INCIDENTAL TO THE DUE AND LAWFUL PROSECUTION OF THE WORK, AND ARRANGE FOR ALL INSPECTIONS.
7. CONTRACTOR SHALL SPRINKLE FOR DUST CONTROL AS NEEDED OR AS DIRECTED BY THE ENGINEER. NO ADDITIONAL PAYMENT WILL BE MADE FOR THIS SUBSIDIARY WORK.
8. THE CONTRACTOR SHALL VISIT THE PROPOSED SITE LOCATION AND EXAMINE LOCAL CONDITIONS TO BE ENCOUNTERED, IMPROVEMENTS TO BE PROTECTED, PERMITS AND FEES REQUIRED, AND OTHER RESEARCH NECESSARY TO ENSURE THAT HE UNDERSTANDS THE PROJECT THOROUGHLY AND IS FULLY AWARE OF ALL CONDITIONS AND CONSTRAINTS WHICH THE CONTRACTOR MAY ENCOUNTER DURING THE COURSE OF CONSTRUCTION.
9. THE CONTRACTOR WILL BE RESPONSIBLE FOR ACQUIRING ANY NECESSARY OFF–SITE LOCATIONS FOR STORAGE OF ALL EQUIPMENT AND MATERIALS REQUIRED FOR THE CONSTRUCTION OF THE PROJECT AT NO EXTRA PAY. WHEN THESE LOCATIONS ARE ADJACENT TO COUNTY STREETS, THE CONTRACTOR SHALL REPAIR ANY DAMAGE CAUSED TO THOSE STREETS BY CONSTRUCTION TRAFFIC. THIS WORK SHALL BE PERFORMED AT THE CONTRACTOR'S EXPENSE.
10. ANY SOILS/WATER TABLE INFORMATION INCLUDED IN THE PLANS AND/OR SPECIFICATIONS IS FOR REFERENCE ONLY. THE CONTRACTOR IS RESPONSIBLE FOR PERFORMING ANY INVESTIGATION AND/OR RESEARCH NECESSARY TO IDENTIFY EXISTING CONDITIONS THAT MAY IMPACT OR INFLUENCE PROPOSED CONSTRUCTION.
11. WHERE EXISTING ASPHALT AND CONCRETE ARE TO BE CUT, THESE CUTS SHALL BE MADE VERTICAL AND STRAIGHT WHILE BEING CUT WITH A SAW.
12. MATERIALS AND/OR EQUIPMENT SHALL NOT BE STORED OR STOCKPILED WITHIN PROJECT LIMITS LONGER THAN 48 HOURS.

FLOWABLE GROUT MATERIAL:

"DARAFILL" ADMIXTURE MANUFACTURED BY GRACE CONSTRUCTION PRODUCTS. FLOWABLE GROUT SHALL BE SUPPLIED WITH THE FOLLOWING MIXTURE BY AN APPROVED READY–MIX SUPPLIER. THE MANUFACTURER'S REPRESENTATIVE SHALL BE CONSULTED FOR ANY FINAL ADJUSTMENTS TO IMPROVE THE FLOWABILITY OF THE MIXTURE.

100 lbs/CY PORTLAND CEMENT
300 lbs/CY FLY ASH
250 lbs/CY WATER
2100 lbs/CY SAND
6 oz/CY DARAFILL

CAUTION:

HIGH PRESSURE GAS LINES AND PRODUCT PIPELINES MAY BE LOCATED WITHIN THE PROJECT LIMITS. CONTRACTOR SHALL NOTIFY THE COUNTY, LOCAL GAS DEPARTMENT AND OR APPROPRIATE PIPELINE COMPANIES 72 HOURS PRIOR TO ACTUAL START OF CONSTRUCTION, AND HAVE ALL PIPELINES LOCATED PRIOR TO BEGINNING CONSTRUCTION. IMMEDIATE ADVISE ENGINEER OF ANY CONFLICTS.

DRIVEWAYS

1. DRIVEWAYS SHALL BE AS SHOWN ON COUNTY "STANDARD DRIVEWAY DETAILS".
2. DRIVEWAYS SHALL BE CONSTRUCTED SUCH THAT TEXTURED SURFACES ARE NOT REQUIRED, AS IN THE CASE OF CURB RAMPS.
3. EXISTING DRIVEWAYS, SIDEWALKS, CURB, GUTTER AND STORM SEWERS SHALL BE REMOVED AS REQUIRED TO CONSTRUCT THE PROPOSED IMPROVEMENTS, INCLUDING THAT WHICH IS REQUIRED FOR GRADE ADJUSTMENTS BEYOND THE PROPERTY LINE, IF DIRECTED BY THE ENGINEER. REMOVAL OF THESE ITEMS IS SUBSIDIARY TO "STREET EXCAVATION" AND "CLEAR RIGHT–OF–WAY", UNLESS OTHERWISE SPECIFIED. CONCRETE SIDEWALK RUNNERS AND CONCRETE DRIVEWAYS PLACED FOR TRANSITION SHALL BE PAID FOR UNDER THE UNIT PRICE FOR "CONCRETE SIDEWALK" AND "CONCRETE DRIVEWAY" REGARDLESS OF WIDTH. CONTRACTOR SHALL PROVIDE SATISFACTORY GRADE AND POSITIVE DRAINAGE FOR ALL DRIVEWAYS AND SIDEWALKS, AND SHALL FULLY COMPLY WITH TEXAS ACCESSIBILITY STANDARDS. SIDEWALK RUNNERS AND DRIVEWAY TRANSITIONS OF OTHER MATERIALS (I.E. ASPHALT, STONE, CALICHE, ETC.) LOCATED OUTSIDE OF THE R.O.W. SHALL BE REPLACED IN–KIND WITH REGARD TO TYPE AND THICKNESS OF MATERIALS, AND UNLESS INDICATED OTHERWISE IN THE PROPOSAL, SHALL BE SUBSIDIARY TO THE APPROPRIATE BID ITEMS.
4. PRIOR TO DRIVEWAY CONSTRUCTION, THE CONTRACTOR SHALL DETERMINE THE DIFFERENCE IN ELEVATION FROM THE HIGHEST POINT OF THE EXISTING DRIVEWAY AT THE R.O.W. LINE TO THE PROPOSED GUTTER ELEVATION. IF THE PROPOSED DRIVEWAY CANNOT BE CONSTRUCTED WITHIN THE MAXIMUM ALLOWABLE SLOPE, THE CONTRACTOR SHALL EXTEND THE PROPOSED DRIVEWAY IMPROVEMENTS BEYOND THE R.O.W. AS REQUIRED SO THAT THE MAXIMUM ALLOWABLE SLOPE IS NOT EXCEEDED. IN DETERMINING THE REQUIRED LENGTH OF PROPOSED DRIVEWAY IMPROVEMENTS, THE CONTRACTOR SHALL INCLUDE AT LEAST 3 FEET FOR THE PEDESTRIAN ACCESSIBLE ROUTE WITH A MAXIMUM CROSS SLOPE OF 50:1. CONTRACTOR TO ACQUIRE PROPERTY OWNERS PERMISSION WHEN EXTENDING INTO PRIVATE PROPERTY.
5. EXCEPT WHERE INDICATED OTHERWISE ON THE DRAWINGS, CURB RAMPS SHALL BE REQUIRED AT EACH CORNER OF EACH STREET INTERSECTION, AT CROSSWALKS, AND AS DIRECTED BY THE ENGINEER.
6. CONCRETE PLACEMENT SHALL STOP AT EXPANSION JOINTS IN SIDEWALKS OR AS OTHERWISE DIRECTED BY THE ENGINEER.
7. WHERE PROPOSED CONCRETE SIDEWALK TIES INTO EXISTING CONCRETE, CONTRACTOR SHALL PLACE A REDWOOD STRIP EXPANSION JOINT FILLER WITH ½"Ø X 15" LONG SMOOTH DOWELS DRILLED AND EPOXY SET WITH AN EXPANSION CAP AT ONE END. DOWELS SHALL BE SPACED AS SHOWN ON THE PLANS.
8. UNPAVED AREAS BETWEEN THE BACK OF CURB AND R.O.W. LINE SHALL BE GRADED, TILLED AND BLOCK SODDED AS DIRECTED.

DEWATERING/BYPASS PUMPING

1. THE CONTRACTOR MUST TAKE ALL MEASURES POSSIBLE TO REDUCE NOISE AND MINIMIZE AUDIBLE POLLUTION BY UTILIZING SILENCED PUMPS/MOTORS/ENGINES OR OTHER EQUIPMENT THAT MAY GENERATE EXCESSIVE NOISE. THE CONTRACTOR SHALL ALSO CONSTRUCT OR PURCHASE SOUND BAFFLING DEVICES TO ENHANCE NOISE REDUCTION. IT WILL BE ULTIMATELY DECIDED BY THE COUNTY/ENGINEER WHAT NOISE LEVEL SHALL BE ACCEPTABLE DURING THE DEWATERING/BYPASSING OPERATIONS.
2. ALL DEWATERING DISCHARGE TO BE PUMPED AND ROUTED TO A ROADSIDE DICTH ALONG RANCH ROAD.

MISCELLANEOUS

1. ALL WORK SHALL BE PERFORMED DURING DAYLIGHT HOURS UNLESS AUTHORIZED IN WRITING BY OWNER/ENGINEER.
2. CONTRACTOR TO INSTALL SODDING ON ALL NATURAL GROUND AREA WITHIN RIGHT OF WAY PROPERTY AND WITHIN TEMPORARY CONSTRUCTION EASEMENTS. CONTRACTOR SHALL ALSO PROVIDE AND APPLY 500 GALLON (MIN.) OF WATER UPON COMPLETION OF PLANTING SAID SODDING.

COMPLIANCE REQUIREMENTS FOR STORMWATER DISCHARGES FROM CONSTRUCTION SITES (TPDES GENERAL PERMIT TXR150000)

1. CONTRACTOR MUST COMPLY WITH TEXAS COMMISSION ON ENVIRONMENTAL QUALITY(TCEQ) TEXAS POLLUTION DISCHARGE ELIMINATION SYSTEM(TPDES) WATER QUALITY STANDARDS, CLEAN WATER ACT AND ALL OTHER FEDERAL, STATE OR LOCAL AGENCY REQUIREMENTS, AS APPLICABLE. FOR SOIL DISTURBANCES OF ONE (1) ACRE OR MORE, CONTRACTOR MUST COMPLY WITH REQUIREMENTS OF TPDES GENERAL PERMIT TXR150000 RELATING TO STORMWATER DISCHARGES FROM CONSTRUCTION ACTIVITIES, ALSO REFERRED TO AS THE CONSTRUCTION GENERAL PERMIT (CGP) FOR SMALL (< 5 ACRES) OR LARGE CONSTRUCTION (≥ 5 ACRES) ACTIVITIES, AS APPLICABLE.
2. IF NOT INCLUDED IN THE CONTRACT DOCUMENTS, THE CONTRACTOR MUST PREPARE A STORMWATER POLLUTION PREVENTION PLAN (SWPPP) WITH SITE SPECIFIC BEST MANAGEMENT PRACTICES (BMPS) AND STRUCTURAL/EROSION CONTROLS FOR THE CONSTRUCTION PROJECT ACCORDING TO PROVISIONS OF THE CGP.
3. FOR LARGE CONSTRUCTION ACTIVITIES, CONTRACTOR MUST SUBMIT A NOTICE OF INTENT (NOI) IN THE REQUIRED FORMAT AND PAY THE APPLICABLE FEE IN ACCORDANCE WITH CGP.
4. CONTRACTOR MUST PROVIDE A SIGNED COPY OF THE NOI TO THE MS4 OPERATOR AND LIST IN THE SWPPP THE NAMES AND ADDRESSES OF THE MS4 RECEIVING A COPY.
5. CONTRACTOR MUST IMPLEMENT THE SWPPP WITH BMPS AND CONTROLS IN PLACE PRIOR TO COMMENCING CONSTRUCTION ACTIVITIES. A COPY OF THE SWPPP MUST BE RETAINED AT THE CONSTRUCTION SITE FOR THE DURATION OF THE PROJECT.
6. CONTRACTOR MUST POST SITE NOTICES IN ACCORDANCE WITH THE CGP IN A LOCATION FOR EASE OF VIEWING BY THE GENERAL PUBLIC AND BY LOCAL, STATE AND FEDERAL AUTHORITIES PRIOR TO COMMENCING CONSTRUCTION ACTIVITIES.
7. CONTRACTOR MUST SUBMIT A NOTICE OF TERMINATION (NOT), AS APPLICABLE, AT THE END OF CONSTRUCTION AFTER DISTURBED AREAS HAVE REACHED FINAL STABILIZATION IN ACCORDANCE WITH THE REQUIREMENTS OF THE CONSTRUCTION GENERAL PERMIT.

WATERLINES

1. WATERLINES TO BE PVC AND COMPLY WITH AWWA C900 OR C905 DR18, CLASS 165, BLUE IN COLOR AND EACH LENGTH BEAR IDENTIFICATION MARKING IN CONFORMANCE WITH AWWA.
2. WATER METERS SHALL BE ACCESSIBLE DURING CONSTRUCTION.
3. THE CONTRACTOR SHALL COORDINATE WITH COUNTY WATER DEPARTMENT PERSONNEL TO SCHEDULE AND SEQUENCE OPTIMUM TIME FOR WATER CONNECTION TIE–INS.
4. VALVE BOXES AND METER BOXES TO REMAIN IN SERVICE SHALL BE ADJUSTED TO FINISH GRADE.
5. ABANDONED WATER FITTINGS, VALVES, FIRE HYDRANTS, ETC. SHALL BE RECOVERED AND STOCKPILED AT A SECURE LOCATION BY THE CONTRACTOR FOR SALVAGE BY THE COUNTY. HOWEVER, ALL RELATED ITEMS THAT ARE UNWANTED BY THE COUNTY SHALL BECOME THE PROPERTY OF THE CONTRACTOR.
6. WHERE A WASTEWATER LINE AND A WATERLINE CROSS, THE WATERLINE SHALL BE PLACED OVER THE WASTEWATER LINE WITH A VERTICAL CLEARANCE OF 2 FEET. IF THIS IS NOT POSSIBLE, THE WASTEWATER LINE SHALL BE C900 OR C905 WITH A MINIMUM PRESSURE RATING OF 150 PSI, OR SHALL BE ENCASED WITH A STANDARD 20–FT. LENGTH OF PRESSURE PIPE. THE CASING PIPE SHALL NOT BE PAID FOR DIRECTLY BUT SHALL BE SUBSIDIARY TO THE CARRIER PIPE.
7. CONNECTIONS TO THE EXISTING WATER SYSTEM WILL BE PAID FOR AS INDICATED IN THE BID PROPOSAL.
8. EXISTING ASBESTOS–CEMENT WATERLINES MAY BE REMOVED OR GROUTED & ABANDONED IN PLACE, AT THE CONTRACTOR'S OPTION. HOWEVER, THERE ARE SOME AREAS WHERE THE EXISTING WATERLINE MUST BE REMOVED IN ORDER TO ACCOMMODATE CONSTRUCTION OF THE PROPOSED IMPROVEMENTS. ALL ASBESTOS–CEMENT (AC) PIPE DESIGNATED FOR REMOVAL SHALL BE DISPOSED OF IN STRICT COMPLIANCE WITH LOCAL, STATE AND FEDERAL REGULATIONS AND STANDARDS GOVERNING ASBESTOS HANDLING, REMOVAL AND DISPOSAL. COMPLY WITH TITLE 29 CFR SECTION 1926 SAFETY HEALTH REGULATIONS FOR CONSTRUCTION AND EPA TITLE 40 CFR PART 61 SUBPART M–NATIONAL EMISSION STANDARDS FOR ASBESTOS. DISPOSAL OF AC PIPE WILL NOT BE PAID FOR DIRECTLY BUT SHALL BE CONSIDERED SUBSIDIARY WORK, MANIFEST ALL DISPOSAL.
9. UNLESS OTHERWISE INDICATED, EXISTING WATERLINES AND APPURTENANCES TO BE REMOVED WILL NOT BE PAID FOR DIRECTLY BUT SHALL BE CONSIDERED SUBSIDIARY WORK.
10. WATERLINES TO BE ABANDONED IN PLACE SHALL BE FILLED WITH FLOWABLE GROUT MATERIAL (SEE MIXTURE NOTE), AND SHALL BE DETACHED AND CAPPED A MINIMUM OF 10 FEET FROM THE CONNECTION POINT.
11. WHERE EXISTING WATER SERVICE LINE CONNECTS TO EXISTING WATERLINE TO BE REMOVED OR ABANDONED, PROVIDE NEW WATER SERVICE LINE OF SAME SIZE FROM NEW PVC WATERLINE TO EXISTING WATER METER. REPAIR EXISTING WATER SERVICE TO REMAIN WITH SAME QUALITY MATERIALS.
12. THE EXACT LOCATION AND SIZE OF EACH INDIVIDUAL WATER SERVICE CONNECTION SHALL BE DETERMINED IN THE FIELD BY THE CONTRACTOR PRIOR TO INSTALLATION OF THE PROPOSED WATERLINES. CONTRACTOR SHALL INSTALL THE APPROPRIATE SIZE WATER SERVICE FROM THE MAIN TO THE EXISTING WATER METER IN ACCORDANCE WITH COUNTY STANDARD WATER DETAILS.
13. FIRE HYDRANT LEADS LONGER THAN 20 FEET MAY UTILIZE C900 PVC (DR 18) PIPE UP TO THE GATE VALVE. PROVIDE RESTRAINT AS REQUIRED.
14. RELOCATION OF EXISTING FIRE HYDRANT ASSEMBLY INCLUDES REMOVING AND REINSTALLING THE FIRE HYDRANT IN A DIFFERENT LOCATION. THIS WORK NORMALLY WILL INCLUDE PROVIDING A NEW 6" DUCTILE IRON LEAD AND, IF REQUIRED, A NEW DUCTILE IRON TEE. OTHER ELEMENTS OF THE EXISTING FIRE HYDRANT ASSEMBLY SHOULD BE SALVAGED AND REUSED PROVIDED THAT THESE ELEMENTS ARE IN GOOD CONDITION AND APPROVED BY THE COUNTY AND ENGINEER.
15. WATER SERVICES DAMAGED DURING CONSTRUCTION SHALL BE REPAIRED WITH SAME QUALITY OF EXISTING SERVICE LINE WITH NO SEPARATE PAY.
16. CONTRACTOR IS RESPONSIBLE FOR COORDINATING WITH RESIDENTS AND COUNTY PERSONNEL ON ANY WATER SERVICE WORK PERFORMED OUTSIDE THE SCOPE OF THIS PROJECT.
17. WATERLINES SHALL BE PLACED A MIN. OF 3 FEET BELOW THE ADJACENT EXISTING TOP OF ASPHALT PAVING. HOWEVER, DUE TO POTENTIAL CONFLICTS, IT MUST BE PLACED DEEPER AT CRITICAL LOCATIONS ONLY AS SHOWN IN THE PLANS. IT IS NOT INTENDED THAT THE LINES BE PLACED AT THESE DEPTHS FOR LONG DISTANCES. THESE DEPTHS ARE TYPICALLY TO BE ATTAINED BY VERTICAL OFFSETS WITH BENDS AND EXTEND SHORT DISTANCES. THIS WORK SHALL BE COORDINATED WITH THE COUNTY WATER DEPARTMENT.
18. DISPOSAL OF HIGHLY CHLORINATED WATER SHALL BE IN ACCORDANCE WITH EPA AND TCEQ REGULATIONS.
19. THE CONTRACTOR SHALL ADJUST THE PROPOSED WATER LINES ACCORDINGLY TO AVOID UNFORESEEN OBSTRUCTIONS AND ELEVATION DIFFERENCE. THIS SHALL BE CONSIDERED SUBSIDIARY TO THE APPROPRIATE BID ITEMS.
20. THE PROPOSED WATER LINE IMPROVEMENTS SHALL CONFORM TO ANSI/NSF 61 AND SHALL BE CERTIFIED AS PER TCEQ'S CHAPTER 290.44 (a)(1).
21. HYDROSTATIC LEAKAGE RATES SHALL CONFORM TO AWWA FORMULAS AND AS PER TCEQ'S CHAPTER 290.44(a)(5).
22. PIPE AND FITTINGS TO CONTAIN NO MORE THAN 8.0% LEAD AS PER TCEQ'S CHAPTER 290.44(b)(1).
23. SEPARATION DISTANCE FOR WATER LINES, WASTEWATER LINES, MANHOLES, AND FIRE HYDRANTS SHALL BE ACCORDANCE WITH TCEQ'S CHAPTER 290.44(e).
24. DISINFECTION ON THIS PROJECT SHALL BE IN ACCORDANCE TCEQ'S CHAPTER 290 AND AWWA STANDARD C651.
25. ANY WATER METERS INSTALLED OR UPGRADED SHALL BE PLACED NEXT TO THE PROPERTY LINE.
26. WATER SERVICES SHALL BE REPAIRED WITH SAME QUALITY MATERIAL AS EXISTING SERVICE LINE WITH NO SEPARATE PAY.
27. CONTRACTOR SHALL COORDINATE WATERLINE HYDROSTATIC TESTING AND BACTERIOLOGICAL TESTING WITH THE PROPOSED CONSTRUCTION SEQUENCING FOR THIS PROJECT.
28. REFERENCED FROM TCEQ PUBLIC DRINKING WATER CHAPTER 290.44. WATER DISTRIBUTION – 290.44(e)(4)(A)(i) – (4) WHERE THE NINE–FOOT SEPARATION DISTANCE CANNOT BE ACHIEVED, THE FOLLOWING CRITERIA SHALL APPLY. (A) NEW WATERLINE INSTALLATION – PARALLEL LINES. (i) WHERE A NEW POTABLE WATERLINE PARALLELS AN EXISTING, NON–PRESSURE OR PRESSURE RATED WASTEWATER MAIN OR LATERAL AND THE LICENSED PROFESSIONAL ENGINEER LICENSED IN THE STATE OF TEXAS IS ABLE TO DETERMINE THAT THE EXISTING WASTEWATER MAIN OR LATERAL IS NOT LEAKING, THE NEW POTABLE WATERLINE SHALL BE LOCATED AT LEAST TWO FEET ABOVE THE EXISTING WASTEWATER MAIN OR LATERAL, MEASURED VERTICALLY, AND AT LEAST FOUR FEET AWAY, MEASURED HORIZONTALLY, FROM THE EXISTING WASTEWATER MAIN OR LATERAL. EVERY EFFORT SHALL BE EXERTED NOT TO DISTURB THE BEDDING AND BACKFILL OF THE EXISTING WASTEWATER MAIN OR LATERAL.
29. REFERENCED FROM TCEQ PUBLIC DRINKING WATER CHAPTER 290.44. WATER DISTRIBUTION – 290.44(e)(4)(A)(ii) – (4) WHERE THE NINE–FOOT SEPARATION DISTANCE CANNOT BE ACHIEVED, THE FOLLOWING CRITERIA SHALL APPLY. (A) NEW WATERLINE INSTALLATION – PARALLEL LINES. (ii) WHERE A NEW POTABLE WATERLINE PARALLELS AN EXISTING PRESSURE–RATED WASTEWATER MAIN, OR LATERAL AND IT CANNOT BE DETERMINED BY THE LICENSED PROFESSIONAL ENGINEER IF THE EXISTING LINE IS LEAKING, THE EXISTING WASTEWATER MAIN OR LATERAL SHALL BE REPLACED WITH AT LEAST 150 PSI PRESSURE–RATED PIPE. THE NEW POTABLE WATERLINE SHALL BE LOCATED AT LEAST TWO FEET ABOVE THE NEW WASTEWATER LINE, MEASURED VERTICALLY, AND AT LEAST TWO FEET ABOVE THE NEW WASTEWATER LINE, MEASURED VERTICAL, AND AT LEAST FOUR FEET AWAY, MEASURED HORIZONTALLY, FROM THE REPLACED WASTEWATER MAIN OR LATERAL.
30. REFERENCED FROM TCEQ PUBLIC DRINKING WATER CHAPTER 290.44. WATER DISTRIBUTION – 290.44(e)(4)(B)(i)(I&II) – (B) NEW WATERLINE INSTALLATION–CROSSING LINES. (i)–WHERE A NEW POTABLE WATERLINE CROSSES ABOVE A WASTEWATER MAIN OR LATERAL, THE SEGMENT OF THE WATERLINE PIPE SHALL BE CENTERED OVER AND MUST BE PERPENDICULAR TO THE WASTEWATER MAIN OR LATERAL SUCH THAT THE JOINTS OF THE WATERLINE PIPE ARE EQUIDISTANT AND AT LEAST NINE FEET HORIZONTALLY FROM THE CENTERLINE OF THE WASTEWATER MAIN OR LATERAL. WHEN CROSSING AN EXISTING WASTEWATER MAIN OR LATERAL AND IT IS DISTURBED OR SHOWS SIGNS OF LEAKING, THE WASTEWATER MAIN OR LATERAL SHALL BE REPLACED FOR AT LEAST NINE FEED IN BOTH DIRECTIONS (18 FEED TOTAL) WITH AT LEAST 150 PSI PRESSURE–RATED PIPE EMBEDDED IN CEMENT STABILIZED SAND (SEE CLAUSE (V) OF THE SUBPARAGRAPH) FOR THE TOTAL LENGTH OF ONE PIPE SEGMENT PLUS 12 INCHES BEYOND THE JOINT ON EACH END. (I) THE POTABLE WATERLINE SHALL BE AT LEAST TWO FEET ABOVE AN EXISTING, NON–PRESSURE RATED WASTEWATER MAIN OR LATERAL. (II) THE POTABLE WATERLINE SHALL BE AT LEAST SIX INCHES ABOVE AN EXISTING, PRESSURE–RATED WASTEWATER MAIN OR LATERAL.
31. REFERENCED FROM TCEQ PUBLIC DRINKING WATER CHAPTER 290.44. WATER DISTRIBUTION – 290.44(e)(4)(B)(iii) – (B) NEW WATERLINE INSTALLATION–CROSSING LINES. (iii) WHEN A NEW WATERLINE CROSSES UNDER A WASTEWATER MAIN OR LATERAL, THE WATERLINE SHALL BE ENCASED AS DESCRIBED FOR WASTEWATER MAINS OR LATERALS IN CLAUSE (ii) OF THIS SUBPARAGRAPH OR CONSTRUCTED OF DUCTILE IRON OR STEEL PIPE WITH MECHANICAL OR WELDED JOINTS AS APPROPRIATE. AN ABSOLUTE MINIMUM SEPARATION DISTANCE OF ONE FOOT BETWEEN THE WATERLINE AND THE WASTEWATER MAIN OR LATERAL SHALL BE PROVIDED. WHEN A NEW WATERLINE CROSSES UNDER A WASTEWATER MAIN THE PROCEDURES IN 217.53(d) OF THIS TITLE (RELATING TO PIPE DESIGN) MUST BE FOLLOWED.

THIS DOCUMENT IS FOR INTERIM REVIEW AND IS NOT INTENDED FOR CONSTRUCTION, BIDDING, PERMIT OR OTHER UNAUTHORIZED PURPOSES. THESE DOCUMENTS/PLANS WERE AUTHORIZED TO BE RELEASED.

BY: ENRIQUE VALDEZ P.E.
LICENSE NO.: 111750 DATE: 6/24/16

ISSUES / REVISIONS

DATE	NO.	DESCRIPTION	BY

WEBB COUNTY, TEXAS
COLORADO ACRES RO PHASE 1 PROJECT

GENERAL NOTES (1 OF 2)

TBPE FIRM NO. F-366
TBPLS FIRM NO. 10126500
LNV engineers | architects | surveyors
6010 MCPHERSON, SUITE 110
LAREDO, TX 78041
PH. (956) 462-5511
WWW.LNVINC.COM

DRAWING NO. 3 of 13

DRAWN BY:	E.F.
CHECKED BY:	E.V.
APPROVED BY:	E.V.
JOB NO:	160149

LEGEND

- EXIST PAVEMENT
- EXIST CONCRETE
- EXIST BASE MATERIAL
- x 600.00 — EXIST SPOT ELEVATION
- 600.00 — EXIST CONTOUR

NOTES:

1. CONTRACTOR SHALL PROPERLY DISPOSE OF ALL DEMOLISHED/REMOVED MATERIALS.
2. THE COUNTY RESERVES THE RIGHT TO SALVAGE ANY AND ALL MATERIAL, HARDWARE AND/OR EQUIPMENT REMOVED BY THE CONTRACTOR. THE CONTRACTOR SHALL PROVIDE THE DISTRICT FIRST RIGHT OF REFUSAL PRIOR TO THE DISPOSAL OR REMOVAL OF SAID MATERIAL, HARDWARE AND/OR EQUIPMENT FROM THE SITE.

BENCHMARK & CONSTRUCTION CONTROL INFORMATION

NO.	NORTHING	EASTING	DESCRIPTION	ELEVATION
CP-1	713390.17	1773330.92	SET NAIL	--
CP-2	709743.01	1763663.86	IRON ROD	--

NOTE:
- THE TOPOGRAPHIC SURVEY FOR THIS PROJECT WAS PERFORMED BY HOWLAND ENGINEERING & SURVEYING ON 4-5-16 AND IS BASED ON NAD83/NAVD29 TEXAS STATE PLANE SOUTH ZONE 4205.
- UTILITIES SHOWN ARE APPROXIMATE ONLY, CONTRACTOR TO FIELD VERIFY EXACT LOCATIONS PRIOR TO CONSTRUCTION.
- CONTRACTOR TO LOCATE ALL UNDERGROUND PIPING BEFORE EXCAVATING.

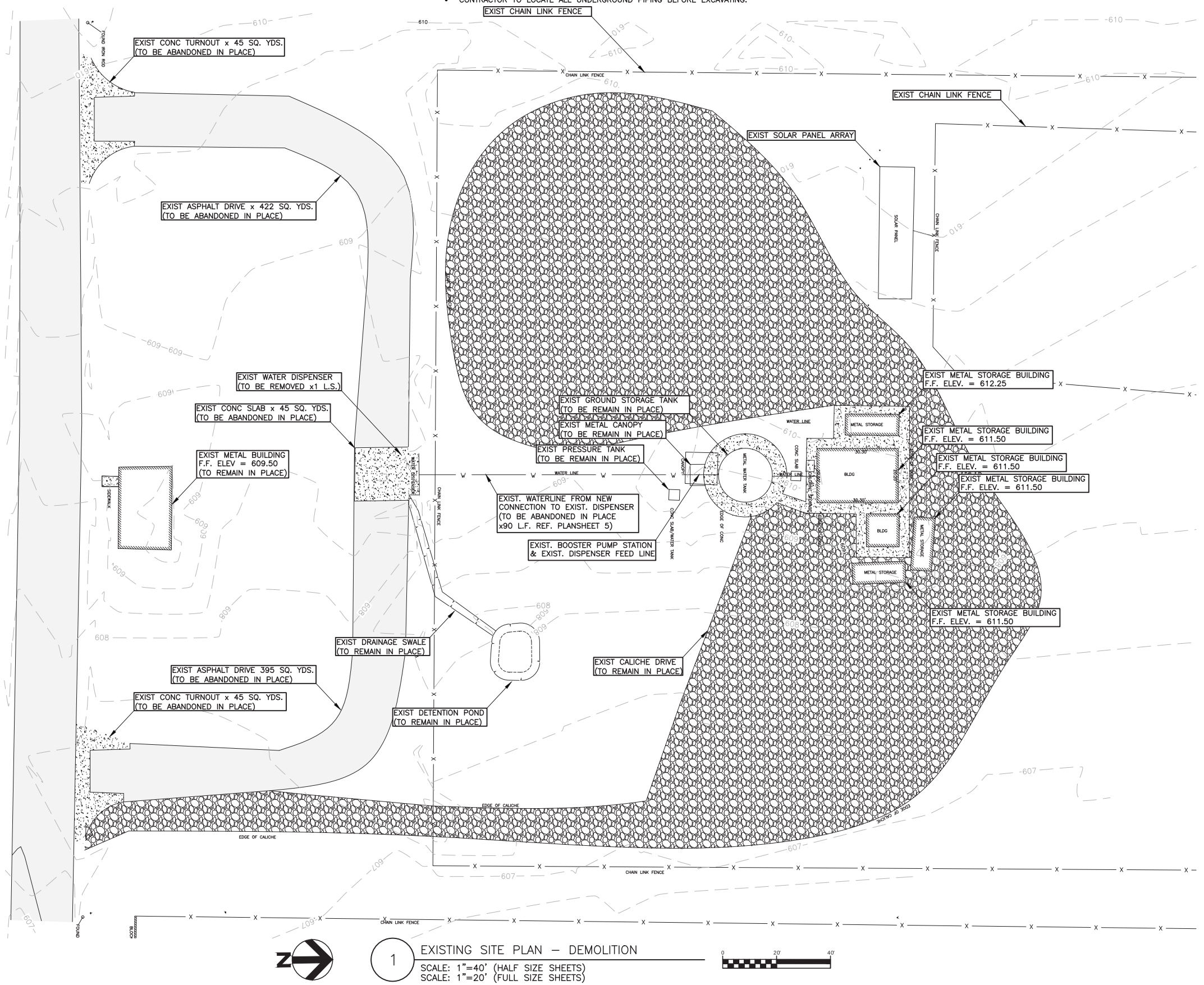

1 EXISTING SITE PLAN – DEMOLITION

SCALE: 1"=40' (HALF SIZE SHEETS)
SCALE: 1"=20' (FULL SIZE SHEETS)

0 20' 40'

THIS DOCUMENT IS FOR INTERIM REVIEW AND IS NOT INTENDED FOR CONSTRUCTION, BIDDING, PERMIT OR OTHER UNAUTHORIZED PURPOSES. THESE DOCUMENTS/PLANS WERE AUTHORIZED TO BE RELEASED:

BY: ENRIQUE VALDEZ P.E.
LICENSE NO.: 111750 DATE: 6/24/16

ISSUES / REVISIONS

NO.	DESCRIPTION	BY	DATE

WEBB COUNTY, TEXAS
COLORADO ACRES RO PHASE 1 PROJECT

EXISTING SITE PLAN

TBPE FIRM NO. F-366
TBPLS FIRM NO. 10128500

LNV engineers | architects | surveyors

6010 LYNDON B. JOHNSON, SUITE 110
LAREDO, TX 78041

PH. (956) 462-5511
WWW.LNVINC.COM

DRAWING NO. 4 of 13

DRAWN BY:	E.F.
CHECKED BY:	E.V.
APPROVED BY:	E.V.
JOB NO:	160149

\\RIS\STORAGE\Projects\Colorado Acres\4 EXISTING SITE PLAN.dwg
Friday, June 24, 2016, 3:14pm

LEGEND

- EXIST PAVEMENT
- EXIST CONCRETE
- EXIST BASE MATERIAL
- PROP CONCRETE
- x 600.00 — EXIST SPOT ELEVATION
- 600.00 — EXIST CONTOUR

BENCHMARK & CONSTRUCTION CONTROL INFORMATION

NO.	NORTHING	EASTING	DESCRIPTION	ELEVATION
CP-1	1773330.92	713390.17	SET NAIL	--
CP-2	1763663.86	709743.01	IRON ROD	--

NOTE:
- THE TOPOGRAPHIC SURVEY FOR THIS PROJECT WAS PERFORMED BY HOWLAND ENGINEERING & SURVEYING ON 4-5-16 AND IS BASED ON NAD83/NAVD29 TEXAS STATE PLANE SOUTH ZONE 4205.
- UTILITIES SHOWN ARE APPROXIMATE ONLY, CONTRACTOR TO FIELD VERIFY EXACT LOCATIONS PRIOR TO CONSTRUCTION.
- CONTRACTOR TO LOCATE ALL UNDERGROUND PIPING BEFORE EXCAVATING.

** SEE SHEET 6 FOR SITE GRADING PLAN. **

COORDINATE INFORMATION

P-#	NORTHING	EASTING
P-1	709772.13	1763710.61
P-2	709772.13	1763784.61
P-3	709787.97	1763774.61
P-4	709800.42	1763770.56
P-5	709771.00	1763865.10
P-6	709777.97	1763865.03
P-7	709812.97	1763884.10
P-8	709771.00	1763939.10

FENCE LINE COORDINATE INFORMATION

CORNER	NORTHING	EASTING
NW	711056.76	1763672.81
NE	711056.56	1763692.80
SE	709874.65	1763681.49
SW	709874.84	1763661.49

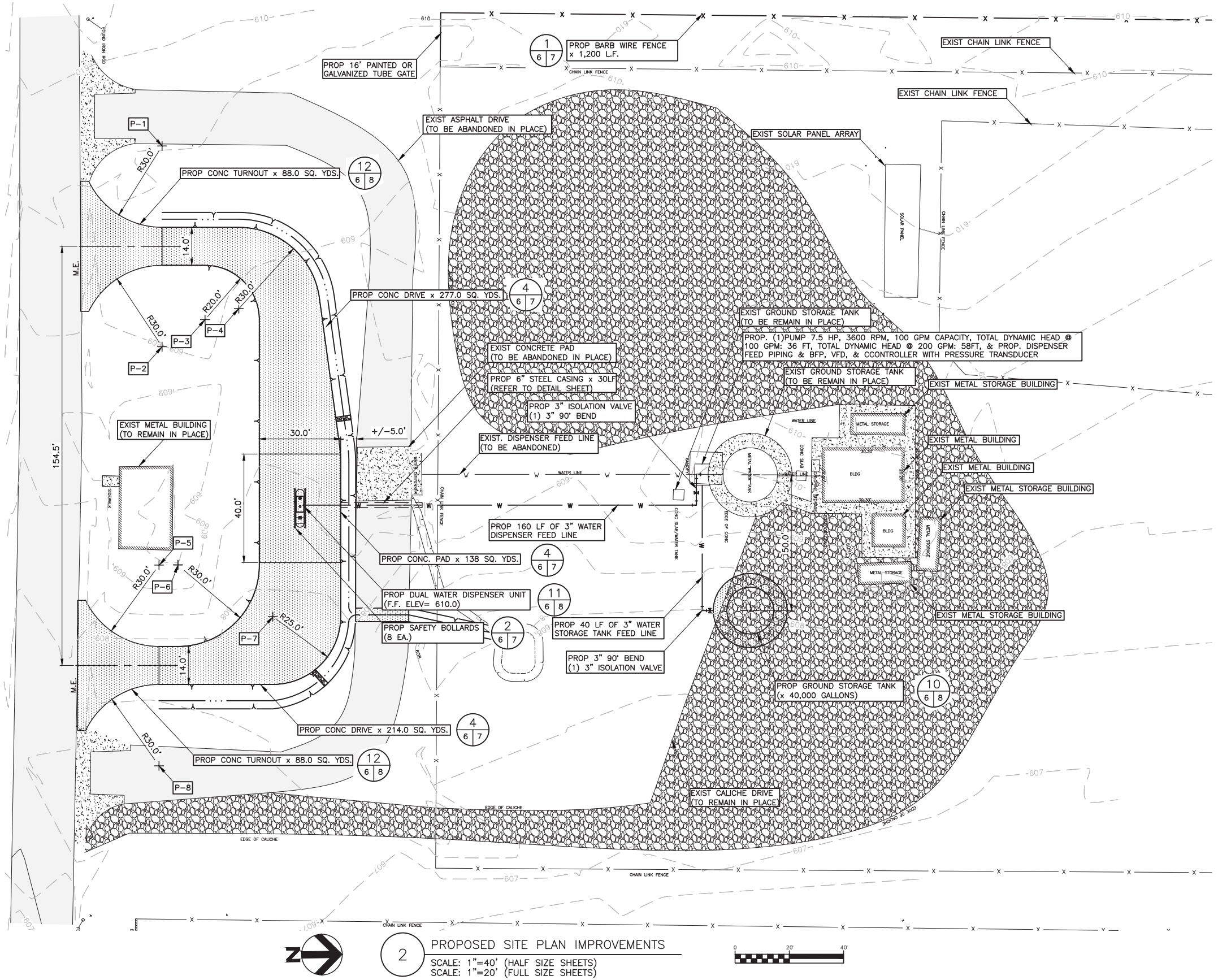

N

2 PROPOSED SITE PLAN IMPROVEMENTS
SCALE: 1"=40' (HALF SIZE SHEETS)
SCALE: 1"=20' (FULL SIZE SHEETS)

0 20' 40'

THIS DOCUMENT IS FOR INTERIM REVIEW AND IS NOT INTENDED FOR CONSTRUCTION, BIDDING, PERMIT OR OTHER UNAUTHORIZED PURPOSES. THESE DOCUMENTS/PLANS WERE AUTHORIZED TO BE RELEASED:
BY: ENRIQUE VALDEZ P.E.
LICENSE NO.: 111750 DATE: 6/24/16

ISSUES / REVISIONS

NO.	DATE	DESCRIPTION	BY

WEBB COUNTY, TEXAS
COLORADO ACRES RO PHASE 1 PROJECT

PROPOSED SITE PLAN IMPROVEMENTS

LNV engineers | architects | surveyors
TBPE FIRM NO. F-366
TBPLS FIRM NO. 10128500
6010 LYNDON B. JOHNSON, SUITE 110
LAREDO, TX 78041
PH. (956) 462-5511
WWW.LNVINC.COM

DRAWING NO. 5 of 13

DRAWN BY:	E.F.
CHECKED BY:	E.V.
APPROVED BY:	E.V.
JOB NO:	160149

\\RBLSTORAGE\Projects\Colorado Acres\5 PROPOSED SITE PLAN.dwg
Friday, June 24, 2016, 3:14pm

LEGEND

- EXIST PAVEMENT
- EXIST CONCRETE
- EXIST BASE MATERIAL
- ROCK FILTER DAM
- PROP CONCRETE
- x 600.00 — EXIST SPOT ELEVATION
- 600.00 — EXIST CONTOUR

BENCHMARK & CONSTRUCTION CONTROL INFORMATION

NO.	NORTHING	EASTING	DESCRIPTION	ELEVATION
CP-1	713390.17	1773330.92	SET NAIL	--
CP-2	709743.01	1763663.86	IRON ROD	--

NOTE:

- THE TOPOGRAPHIC SURVEY FOR THIS PROJECT WAS PERFORMED BY HOWLAND ENGINEERING & SURVEYING ON 4-5-16 AND IS BASED ON NAD83/NAVD29 TEXAS STATE PLANE SOUTH ZONE 4205.
- UTILITIES SHOWN ARE APPROXIMATE ONLY, CONTRACTOR TO FIELD VERIFY EXACT LOCATIONS PRIOR TO CONSTRUCTION.
- CONTRACTOR TO LOCATE ALL UNDERGROUND PIPING BEFORE EXCAVATING.

VALLEY GUTTER NOTE:

- CONTRACTOR TO PLACE METAL TRAFFIC PLATES IN ORDER TO MAINTAIN TRAFFIC FLOW THROUGHOUT THE CONSTRUCTION PHASE.

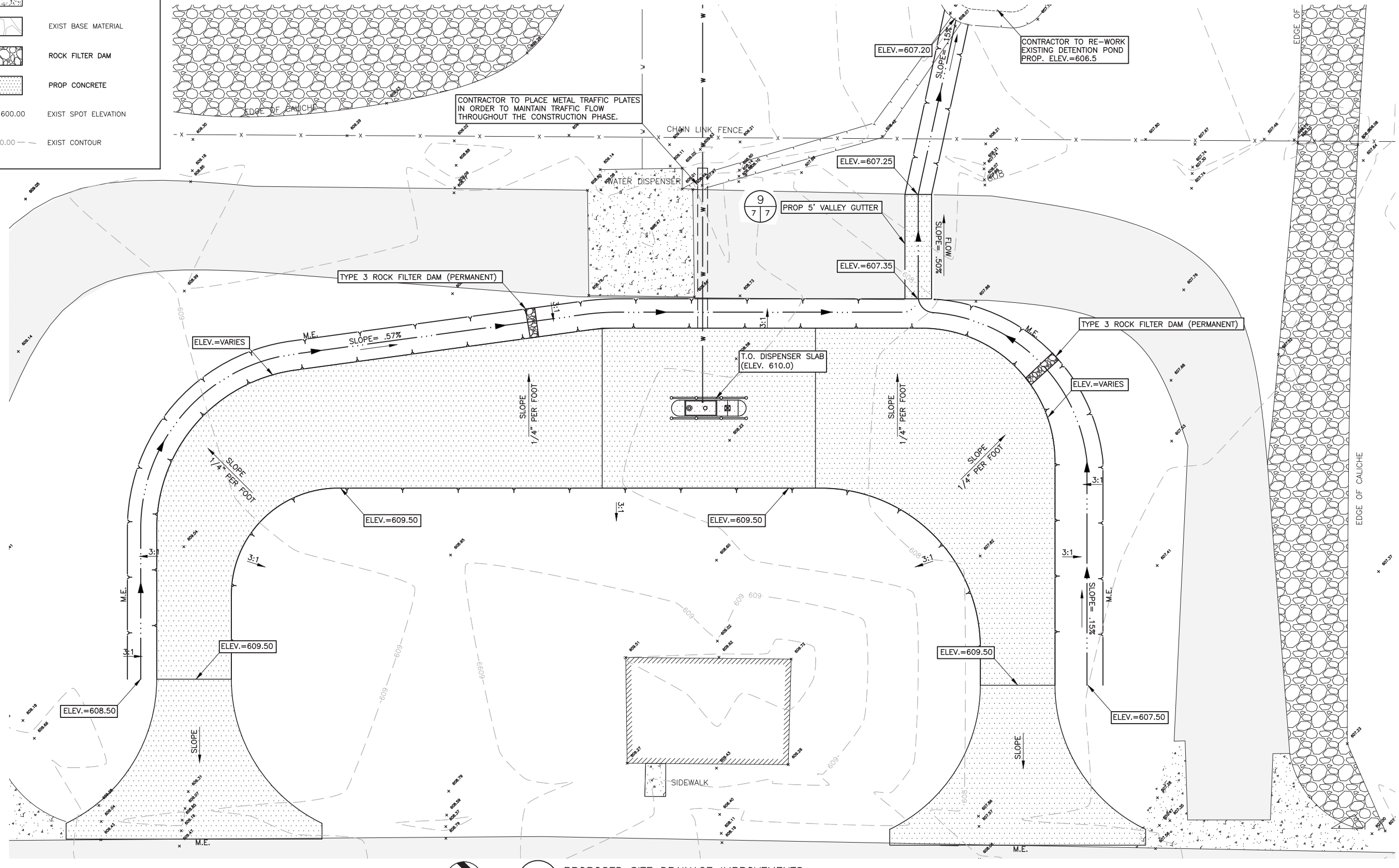

3 PROPOSED SITE DRAINAGE IMPROVEMENTS

SCALE: 1"=20' (HALF SIZE SHEETS)
SCALE: 1"=10' (FULL SIZE SHEETS)

0 20' 40'

THIS DOCUMENT IS FOR INTERIM REVIEW AND IS NOT INTENDED FOR CONSTRUCTION, BIDDING, PERMIT OR OTHER UNAUTHORIZED PURPOSES. THESE DOCUMENTS/PLANS WERE AUTHORIZED TO BE RELEASED:

BY: ENRIQUE VALDEZ P.E.
LICENSE NO.: 111750 DATE: 6/24/16

ISSUES / REVISIONS

NO.	DESCRIPTION	BY	DATE

WEBB COUNTY, TEXAS
COLORADO ACRES RO PHASE 1 PROJECT

PROPOSED SITE DRAINAGE IMPROVEMENTS

LNV engineers | architects | surveyors
TBPE FIRM NO. F-366
TBPLS FIRM NO. 10125500
6010 MCPHERSON, SUITE 110
LAREDO, TX 78041
PH. (956) 462-5511
WWW.LNVINC.COM

DRAWING NO. 6 of 13

DRAWN BY:	E.F.
CHECKED BY:	E.V.
APPROVED BY:	E.V.
JOB NO:	160149

\\HIDALGO\Projects\Colorado Acres\7 PROPOSED SITE DRAINAGE PLAN.dwg
Friday, June 24, 2016, 3:15pm

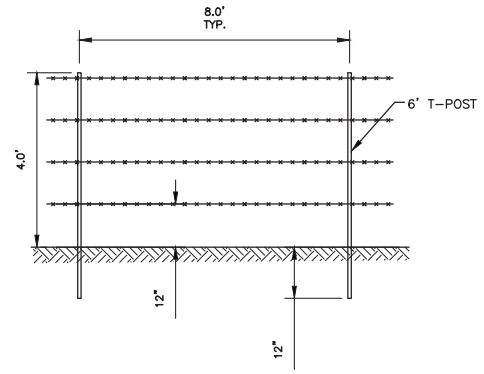

1 / 6 7 — 4 STRAND BARB WIRE FENCING

SCALE: 1" = 2' (HALF SIZE SHEETS)
SCALE: 1" = 1' (FULL SIZE SHEETS)

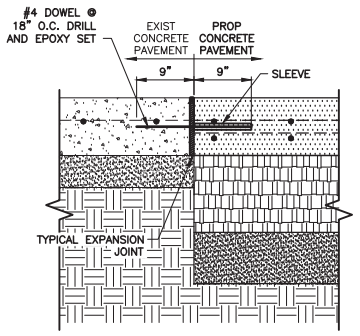

3 / 6 7 — 7" CONCRETE PAVEMENT DOWELING

SCALE: NTS

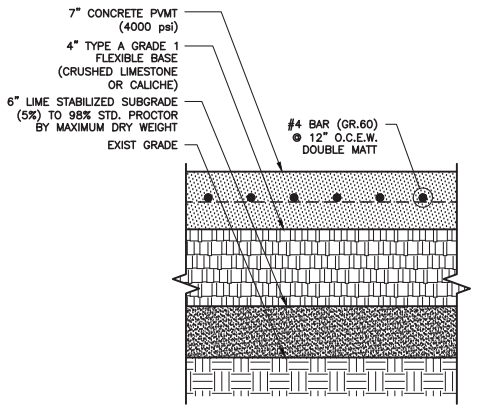

4 / 6 7 — 7" CONCRETE PAVEMENT

SCALE: NTS

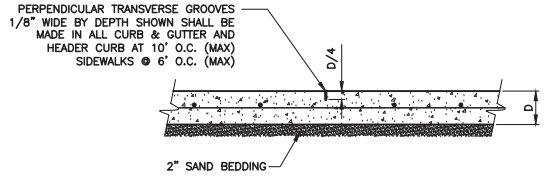

5 / 6 7 — TYPICAL CONCRETE PAVEMENT CONTROL JOINT

SCALE: NTS

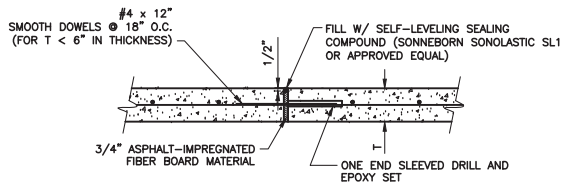

6 / 6 7 — TYPICAL CONCRETE PAVEMENT EXPANSION JOINT

SCALE: NTS

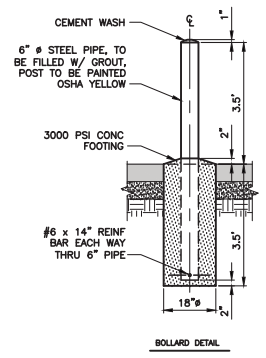

2 / 6 7 — TYPICAL BOLLARD INSTALLATION DETAIL

SCALE: NTS

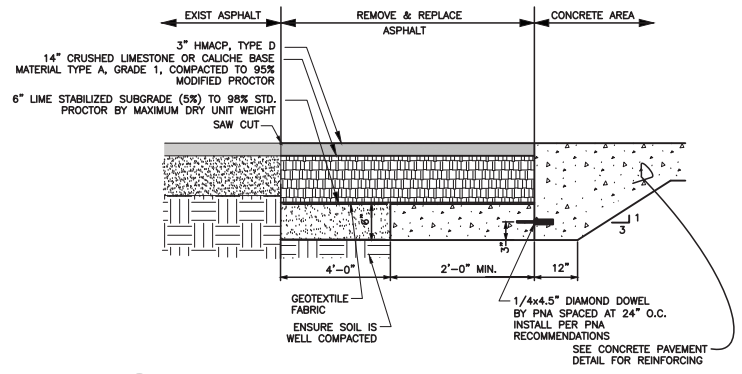

7 / 6 7 — TYPICAL CONCRETE/ASPHALT TRANSITION

SCALE: NTS

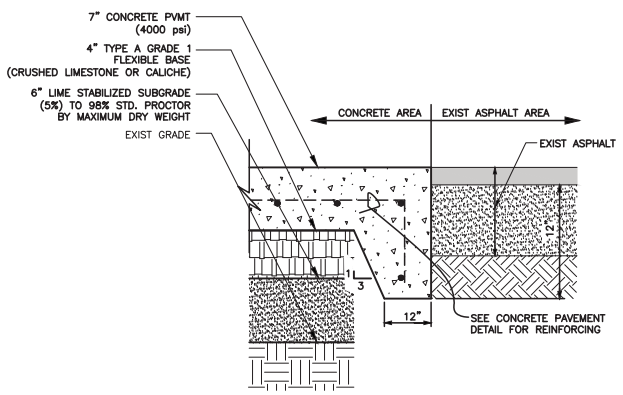

8 / 6 7 — TYPICAL CONCRETE/ASPHALT JUNCTURE

SCALE: NTS

GENERAL NOTES:

1. THE CONTRACTOR SHALL VERIFY ALL DIMENSIONS, ELEVATIONS AND SITE CONDITIONS BEFORE STARTING WORK OR FABRICATION. THE OWNER AND STRUCTURAL ENGINEER SHALL IMMEDIATELY BE NOTIFIED IN WRITING, OF ANY DISCREPANCIES.
2. ALL DETAILS ARE TYPICAL, INCORPORATED INTO PROJECT AT APPROPRIATE LOCATIONS, WHETHER SPECIFICALLY INDICATED OR NOT.
3. ALL CONSTRUCTION, INCLUDING MATERIAL AND WORKMANSHIP, SHALL CONFORM TO THE PROVISIONS OF THE 2009 IBC AND STANDARDS REFERENCED THEREIN.
4. ALL ASTM STANDARDS LISTED HEREIN, SHALL BE AS REFERENCED IN THE LATEST ISSUE OF THE ANNUAL BOOK OF STANDARDS OF THE AMERICAN SOCIETY FOR TESTING AND MATERIALS.
5. ALL OMISSIONS AND/OR CONFLICTS BETWEEN THE VARIOUS ELEMENTS OF THE WORKING DRAWINGS AND SPECIFICATIONS SHALL BE BROUGHT TO THE ATTENTION OF THE OWNER OR STRUCTURAL ENGINEER, WORK SHOULD NOT PROCEED UNTIL A SOLUTION IS GIVEN BY THE OWNER OR STRUCTURAL ENGINEER.
6. IN CASE OF CONFLICT, NOTES AND DETAILS OF THESE STRUCTURAL DRAWINGS SHALL TAKE PRECEDENCE OVER THE "GENERAL NOTES". TYPICAL DETAILS SHALL BE USED WHENEVER APPLICABLE.
7. IF A SPECIFIC DETAIL IS NOT SHOWN FOR ANY PART OF THE WORK, THE CONSTRUCTION SHALL BE THE SAME AS FOR SIMILAR WORK.
8. WORKING DIMENSIONS SHALL NOT BE SCALED FROM PLANS, SECTIONS OR DETAILS ON THESE STRUCTURAL DRAWINGS.
9. THE CONTRACTOR SHALL PROVIDE AND MAINTAIN ADEQUATE ERECTION SHORING AND BRACING AS REQUIRED FOR STABILITY OF THE STRUCTURE DURING ALL PHASES OF CONSTRUCTION. THESE DRAWINGS REPRESENT THE FINISHED STRUCTURE AND DO NOT INDICATE THE METHOD OF CONSTRUCTION.
10. THE CONTRACTOR SHALL ASSUME SOLE AND COMPLETE RESPONSIBILITY FOR JOB SITE CONDITIONS DURING THE COURSE OF CONSTRUCTION OF THIS PROJECT, INCLUDING SAFETY OF ALL PERSONS AND PROPERTY. THIS REQUIREMENT SHALL APPLY CONTINUOUSLY AND NOT BE LIMITED TO NORMAL WORKING HOURS. THE CONTRACTOR SHALL DEFEND, INDEMNIFY AND HOLD THE STRUCTURAL ENGINEER FREE AND HARMLESS FROM ALL CLAIMS, DEMANDS AND ALL LIABILITY, REAL OR ALLEGED, IN CONNECTION WITH THE PERFORMANCE OF WORK ON THIS PROJECT EXCEPT FOR LIABILITY ARISING FROM THE SOLE NEGLIGENCE OF THE STRUCTURAL ENGINEER.
11. IF ANY SUBSTITUTION IS PROPOSED BY THE CONTRACTOR, NEW CALCULATIONS MAY HAVE TO BE PREPARED, THE DETAILS MAY HAVE TO BE ALTERED, ANY NEW DRAWINGS MAY HAVE TO BE SUBMITTED. THE CONTRACTOR SHALL PAY THE STRUCTURAL ENGINEERS FEES TO ALTER THE APPROVED PLANS. THE CONTRACTOR SHALL ALSO PROCESS THE REVISED PLANS REFLECTING ALL SUBSTITUTIONS.

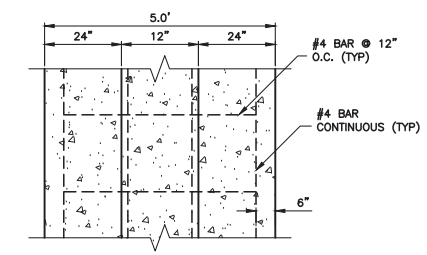

PLAN VIEW

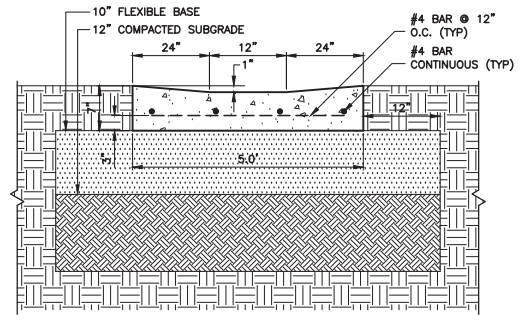

SECTION VIEW

5' VALLEY GUTTER

9 / 6 7 — 5' CONCRETE VALLEY GUTTER

SCALE: NTS

THIS DOCUMENT IS FOR INTERIM REVIEW AND IS NOT INTENDED FOR CONSTRUCTION, BIDDING, PERMIT OR OTHER UNAUTHORIZED PURPOSES. THESE DOCUMENTS/PLANS WERE AUTHORIZED TO BE RELEASED:

BY: ENRIQUE VALDEZ P.E.
LICENSE NO.: 111750 DATE: 6/24/16

ISSUES / REVISIONS

NO.	DESCRIPTION	BY

WEBB COUNTY, TEXAS
COLORADO ACRES RO PHASE 1 PROJECT

MISCELLANEOUS DETAILS (1 OF 2)

TBPE FIRM NO. F-366
TBPLS FIRM NO. 10126500
LNV engineers | architects | surveyors
6010 McPHERSON, SUITE 110
LAREDO, TX 78041
PH. (956) 462-5511
WWW.LNVINC.COM

DRAWING NO. 7 of 13

DRAWN BY:	E.F.
CHECKED BY:	E.V.
APPROVED BY:	E.V.
JOB NO:	160149

\\NPLSTORAGE\Projects\Colorado Acres\10 MISC DETAILS.dwg
Friday, June 24, 2016, 3:15pm

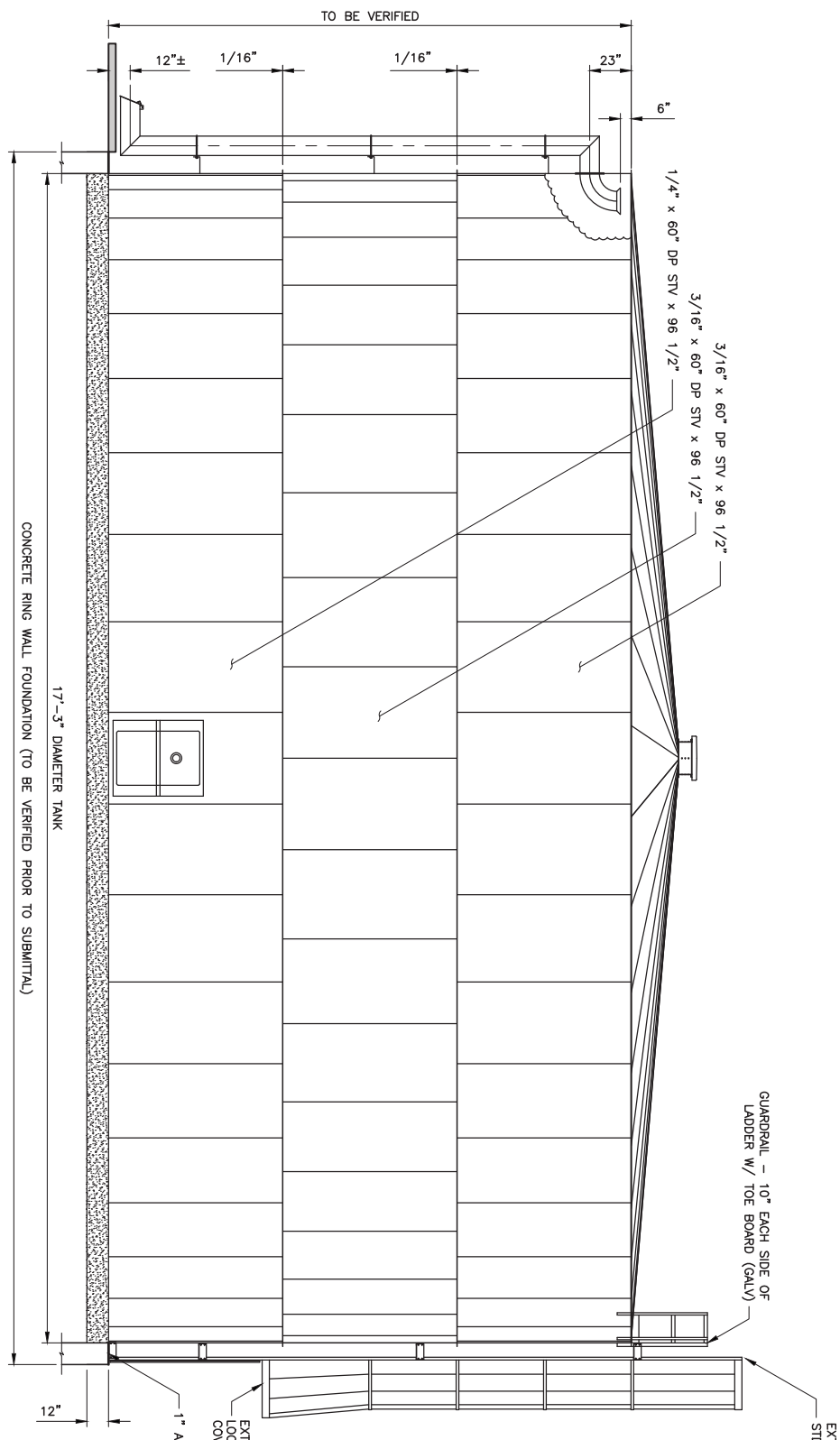

10 / 6 8 TYPICAL 40,000 GALLON WELDED STEEL TANK (SPECS BY OTHERS)
SCALE: NTS

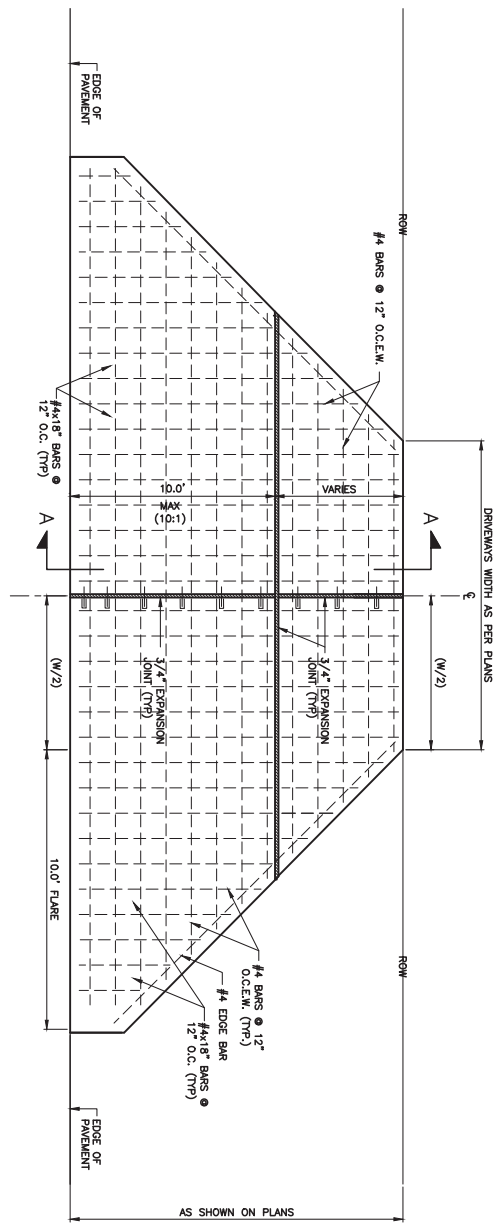

TYPE DRIVEWAY PLAN VIEW
SCALE: NTS

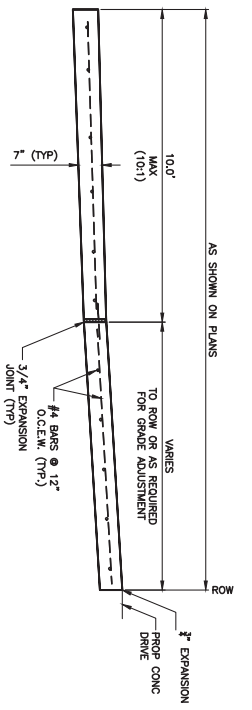

TYPE TC DRIVEWAY SECTION A-A
SCALE: NTS

12 / 6 8 DRIVEWAY TURNOUT DETAILS
SCALE: NTS

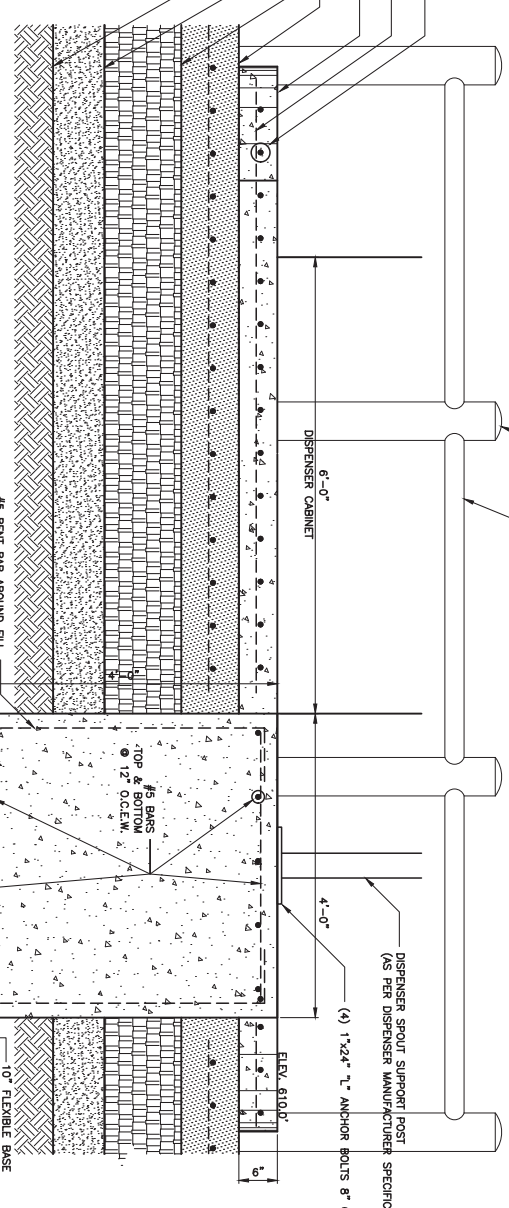

11 / 6 8 DUAL WATER DISPENSER DETAILS
SCALE: 1" = 2' (HALF SIZE SHEETS)
SCALE: 1" = 1' (FULL SIZE SHEETS)

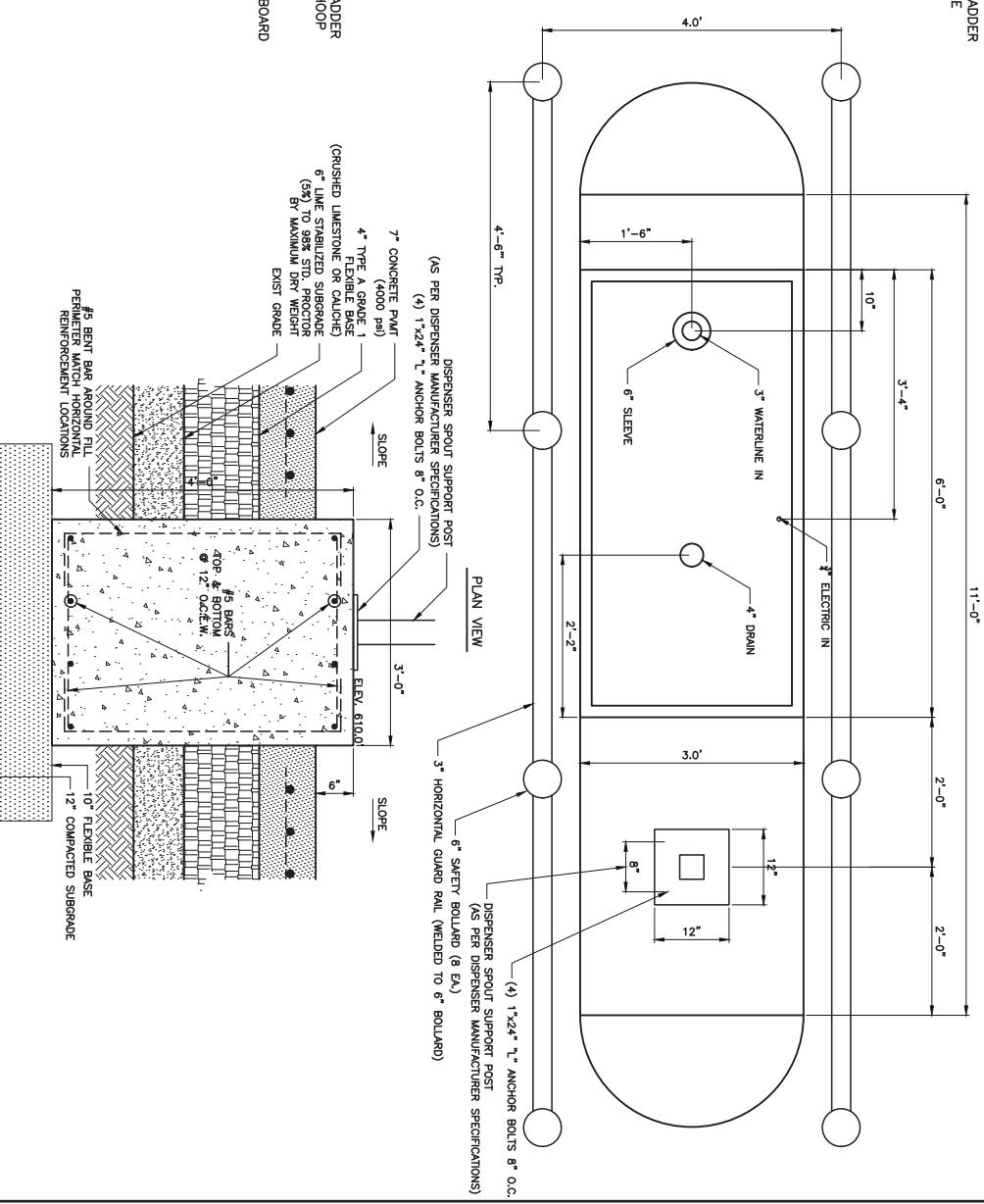

DRAWING NO.	8 of 13		
DRAWN BY:	E.F.		
CHECKED BY:	E.V.		
APPROVED BY:	E.V.		
JOB NO:	160149		

LNV
engineers | architects | surveyors
6010 MCPHERSON, SUITE 110
LAREDO, TX 78041
PH. (956) 462-5511
WWW.LNVINC.COM
TBPE FIRM NO. F-366
TBPLS FIRM NO. 10126500

WEBB COUNTY, TEXAS
COLORADO ACRES RO PHASE 1 PROJECT

MISCELLANEOUS DETAILS (1 OF 2)

ISSUES / REVISIONS

DATE	NO.	DESCRIPTION	BY

THIS DOCUMENT IS FOR INTERIM REVIEW AND IS NOT INTENDED FOR CONSTRUCTION, BIDDING, PERMIT OR OTHER UNAUTHORIZED PURPOSES. THESE DOCUMENTS/PLANS WERE AUTHORIZED TO BE RELEASED.

BY: ENRIQUE VALDEZ P.E.
LICENSE NO.: 111750 DATE: 6/24/16

WATER DISTRIBUTION SYSTEM GENERAL NOTES

1. THE COUNTY RESERVES THE RIGHT TO ACCEPT THE SYSTEM FOR OPERATION AT ANY TIME, BUT THE DATE OF OFFICIAL ACCEPTANCE OF THE SYSTEM WILL BE UPON COMPLETION OF THE PROJECT AND SATISFACTORY TEST RESULTS.
2. THE EXISTING SYSTEM SHALL REMAIN IN SERVICE UNTIL THE PROPOSED SYSTEM IS PUT INTO SERVICE. THE CONTRACTOR SHALL PROTECT THE EXISTING SYSTEM UNTIL IT IS TAKEN OUT OF SERVICE.
3. THE CONTRACTOR SHALL FURNISH ALL MATERIAL, LABOR AND EQUIPMENT REQUIRED TO INSTALL THE PROPOSED SYSTEM.
4. TESTING OF LINES (STERILIZATION AND PRESSURED) SHALL BE DONE BY THE CONTRACTOR UNDER THE SUPERVISION OF THE WATER DIVISION. WATER FOR FILLING THE NEW WATER LINE AND PERFORMING TESTS WILL BE FURNISHED TO THE CONTRACTOR BY THE COUNTY THROUGH A STANDARD WATER CONSTRUCTION METER CONNECTION. STANDARD WATER CONSTRUCTION METER AND GAUGE WILL BE SUPPLIED BY THE COUNTY AFTER THE CONTRACTOR HAS PAID ALL APPLICABLE FEES FOR THE WATER CONSTRUCTION METER. ALL WATER DISCHARGE MUST BE DECHLORINATED IN ACCORDANCE WITH TNRCC & NPDES REGULATIONS.
5. THE CONTRACTOR SHALL RECOVER AND STOCK-PILE AT A LOCATION DESIGNATED BY THE INSPECTOR, ALL FIRE HYDRANTS, VALVES, AND FITTINGS THAT ARE TAKEN OUT OF SERVICE . THESE MATERIALS MAY BE SALVAGED BY THE COUNTY . HOWEVER, ALL ITEMS NOT CLAIMED BY THE COUNTY PRIOR TO THE FINAL INSPECTION SHALL BE DISPOSED OF BY THE CONTRACTOR.
6. THE CONTRACTOR SHALL BEAR ALL COST ASSOCIATED WITH WATERLINE REPAIRS (WHICH RESULT FROM DAMAGE CAUSED BY THE CONTRACTOR) UPON COMPLETION OF PROJECTS. ALL WATER LINES SHALL BE FREE OF ALL PATCHES AND SPLICES.
7. ALL PHYSICAL TIES OF THE PROPOSED SYSTEM INTO THE EXISTING WATERLINE SHALL BE RECONNECTED AND BE MADE UNDER SUPERVISION OF THE COUNTY. THE CONTRACTOR SHALL FURNISH ALL MATERIALS AND ALL EQUIPMENT THAT IS REQUIRED TO MAKE TIE-INS.
8. ALL EXISTING SERVICE CONNECTIONS TIED ONTO THE EXISTING WATERLINE SHALL BE RECONNECTED BY THE CONTRACTOR, INCLUDING RELOCATING EXISTING WATER METERS. IT SHALL BE THE CONTRACTOR'S SOLE RESPONSIBILITY TO NOTIFY AND COORDINATE WITH THE COUNTY INSPECTOR SAID RECONNECTIONS / RELOCATIONS IN ADVANCE OF CONSTRUCTION TO AVOID DELAYS. (NO SEPARATE COSTS)
9. MINOR ADJUSTMENTS IN THE LOCATIONS OF FITTINGS, VALVES, FIRE HYDRANTS, ETC. CAN BE ANTICIPATED. THE CONTRACTOR SHALL MAKE SAID MINOR ADJUSTMENTS AS DIRECTED BY THE ENGINEER AND/OR COUNTY AT NO INCREASE OF CONTRACT PRICE.
10. ALL DUCTILE IRON PIPES, VALVES, AND FITTINGS SHALL BE WRAPPED WITH (2) THICKNESSES OF 8 MIL. POLYETHYLENE AND SHALL BE RESTRAINED WITH FORD'S "UNI-FLANGE SERIES 1500", MECHANICAL JOINT RESTRAINT OR ENGINEER APPROVED EQUAL AT ALL FITTINGS. CONCRETE THRUST BLOCKS SHALL BE PLACED BEHIND ALL FITTINGS EXCEPT WHERE LOCKING OR SWIVEL FITTINGS ARE UTILIZED, UNLESS OTHERWISE SPECIFIED BY THE ENGINEER.
11. CONTRACTOR SHALL COORDINATE WITH COUNTY AND NOTIFY ALL AFFECTED CUSTOMERS 24 HOURS PRIOR TO KILLOUT OF EXISTING WATER SYSTEM.
12. WATER DISTRIBUTION SYSTEM STANDARDS CALL FOR MAXIMUM 48" COVER ON WATERLINES. WHEN DEPTHS EXCEED 48" COVER TO AVOID OBSTRUCTION, THE USES OF BENDS COULD BE REQUIRED.
13. CONTRACTOR SHALL KEEP ALL EXISTING VALVES ACCESSIBLE DURING ALL PHASES OF CONSTRUCTION.
14. ALL NEW WATER MAINS SHALL BE INSTALLED SO THAT PIPE IDENTIFICATION MARKINGS ARE LOCATED ON THE TOP OF THE PIPE.
15. ALL SERVICE LINES UNDER PAVEMENT SHALL BE 3/4"-INCH, INSIDE DIAMETER, MINIMUM.

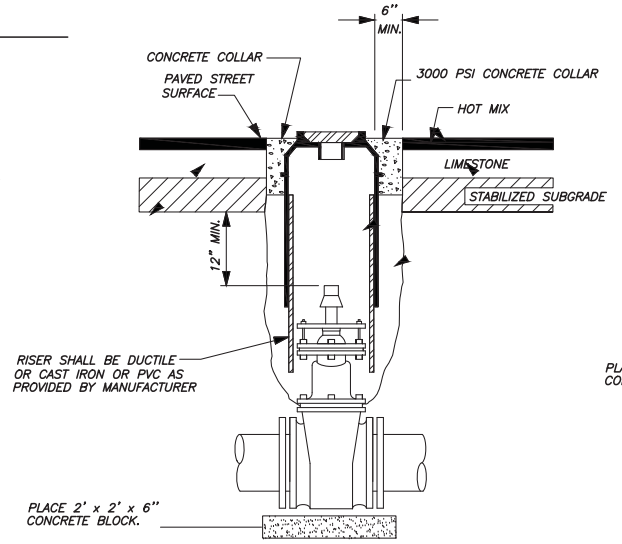

VALVE BOX DETAIL
@ PAVEMENT

NOT TO SCALE

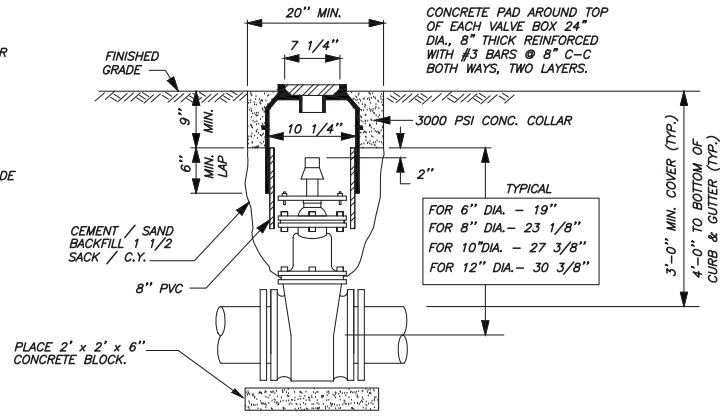

VALVE BOX DETAIL
@ NATURAL GROUND

NOT TO SCALE

ALL VALVES SHALL BE HOUSED IN APPROVED VALVE BOXES

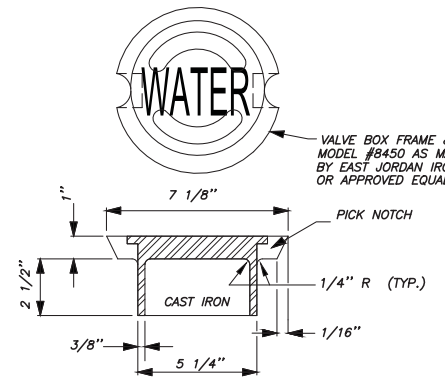

LID DETAIL

NOT TO SCALE

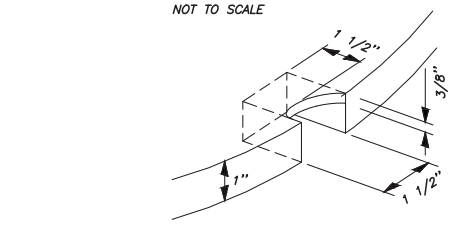

PICK NOTCH

NOT TO SCALE

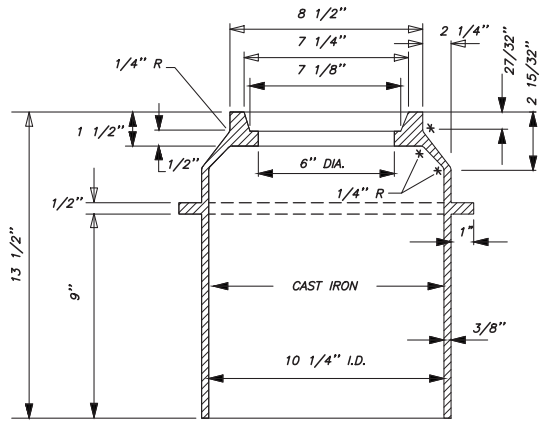

VALVE BOX DETAIL

NOT TO SCALE

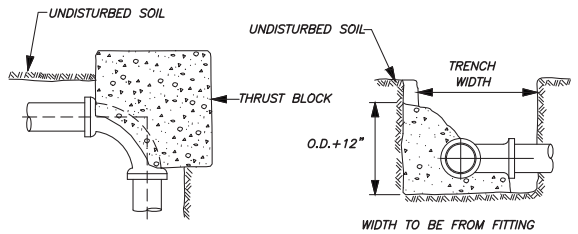

CONCRETE SUPPORT BEHIND FITTING

NOT TO SCALE

MINIMUM THRUST BLOCK AREA REQUIRED					
PIPE SIZE	TEES & PLUGS	90° BEND	45° BEND	22.5° BEND	11.25° BEND
6"	2 SQ. FT.	3 SQ. FT.	2 SQ. FT.	1 SQ. FT.	1 SQ. FT.
8"	4 SQ. FT.	5 SQ. FT.	3 SQ. FT.	1 SQ. FT.	1 SQ. FT.
10"	6 SQ. FT.	8 SQ. FT.	5 SQ. FT.	2 SQ. FT.	1 SQ. FT.
12"	8 SQ. FT.	12 SQ. FT.	6 SQ. FT.	3 SQ. FT.	2 SQ. FT.
16"	15 SQ. FT.	21 SQ. FT.	12 SQ. FT.	6 SQ. FT.	3 SQ. FT.
18"	19 SQ. FT.	27 SQ. FT.	15 SQ. FT.	7 SQ. FT.	4 SQ. FT.
20"	24 SQ. FT.	33 SQ. FT.	18 SQ. FT.	9 SQ. FT.	5 SQ. FT.
24"	34 SQ. FT.	48 SQ. FT.	26 SQ. FT.	13 SQ. FT.	7 SQ. FT.

NOTE:

1. THRUST BLOCKS SHALL BE POURED AGAINST UNDISTURBED SOIL.
2. WHERE TRENCH WALL HAS BEEN DISTURBED, EXCAVATE ALL LOOSE MATERIAL AND EXTEND THRUST BLOCK TO UNDISTURBED SOIL.
3. ON TEES AND BENDS, EXTEND THRUST BLOCK FULL LENGTH.
4. NO CONCRETE SHALL BE POURED OVER BOLTS OR ON TOP OF FITTINGS.
5. BACKFILL SHALL CONSIST ENTIRELY OF CLEAN SOIL FREE OF ROCK FRAGMENTS. ANY MUCK ENCOUNTERED SHALL BE REPLACED WITH ACCEPTABLE BACKFILL.
6. ALL CONCRETE SHALL HAVE A MINIMUM COMPRESSIVE STRENGTH OF 3000 PSI AT 28 DAYS.
7. NO SEPARATE PAYMENT.

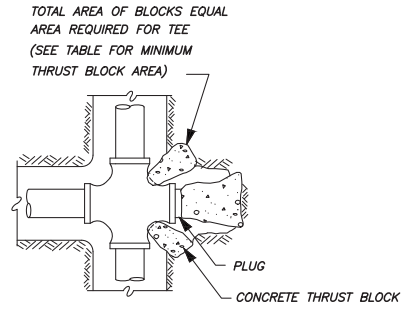

CROSS WITH PLUG

NOT TO SCALE

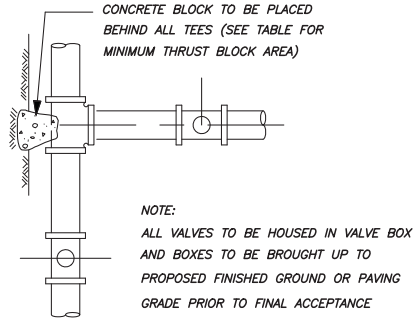

TYPICAL PLAN OF VALVE & THRUST BLOCK LOCATIONS

NOT TO SCALE

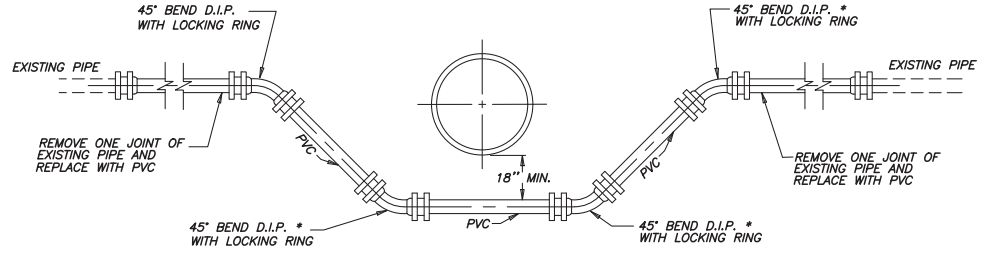

* ALL BENDS TO BE MECH. JOINT FITTING

* ALL FITTINGS SHALL BE RESTRAINED BY MECHANICAL JOINT RESTRAINT DEVICE "MEGALUG" AS INDICATED BY PLANS AND SPECS., OR ENGINEER APPROVED EQUAL, AND CONCRETE THRUST BLOCK, AS DESIGNATED BY WATER DIVISION INSPECTOR

WATERLINE ADJUSTMENT DETAIL

NOT TO SCALE

THIS DOCUMENT IS FOR INTERIM REVIEW AND IS NOT INTENDED FOR CONSTRUCTION, BIDDING, PERMIT OR OTHER UNAUTHORIZED PURPOSES. THESE DOCUMENTS/PLANS WERE AUTHORIZED TO BE RELEASED:
BY: ENRIQUE VALDEZ P.E.
LICENSE NO.: 111750 DATE: 6/24/16

ISSUES / REVISIONS

DATE	NO.	DESCRIPTION	BY

WEBB COUNTY, TEXAS
COLORADO ACRES RO PHASE 1 PROJECT

WATER DETAILS (1 OF 2)

LNV engineers | architects | surveyors
TBPE FIRM NO. F-366
TBPLS FIRM NO. 10126500
6010 McPHERSON, SUITE 110
LAREDO, TX 78041
PH: (956) 462-5511
WWW.LNVINC.COM

DRAWING NO. 9 of 13

DRAWN BY:	E.F.
CHECKED BY:	E.V.
APPROVED BY:	E.V.
JOB NO:	160149

\\NBLSTORAGE\Projects\Colorado Acres\10 MISC DETAILS.dwg
Friday, June 24, 2016, 3:15pm

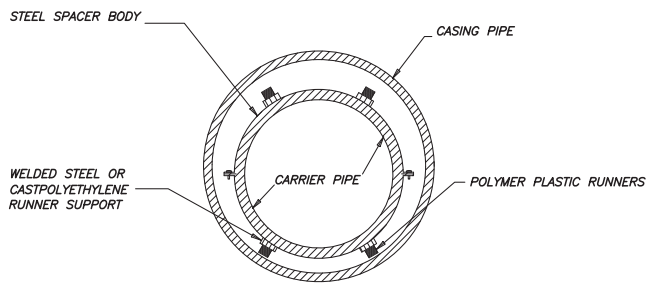

PIPE INSULATION DETAIL

NOT TO SCALE

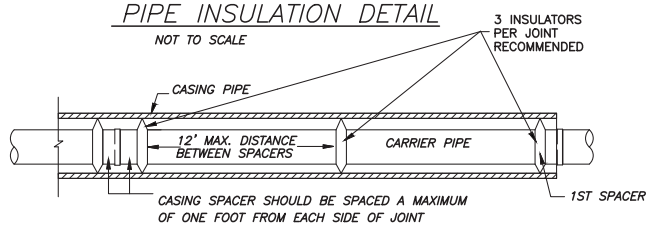

INSULATOR SPACING DETAIL

NOT TO SCALE

CASING AND SPACERS

A. ALL CARRIER PIPE IN CASING SHALL BE SUPPORTED BY BOLT-ON STYLE CASING SPACERS, AS MANUFACTURED BY ADVANCE PRODUCTS INC. OR ENGINEER APPROVED EQUAL.

B. CASING SPACERS FOR PIPE INSTALLED IN CASING SHALL HAVE A FUSION BONDED EPOXY CARBON STEEL BODY, NEOPRENE OR PVC LINER. STEEL SUPPORTS AND U.H.M.W. POLYETHYLENE RUNNERS.

C. CASING SPACERS SHALL BE SIZED TO SECURELY FASTEN ON TO THE CARRIER PIPE BARRIER O.D. AND SHALL BE FURNISHED WITH A MINIMUM RUNNER HEIGHT TO PREVENT THE PIPE FROM RESTING OR SLIDING ON ITS JOINTS DURING THE INSTALLATION.

1. POSITIONING OF SPACERS SHOULD ENSURE THAT THE CARRIER PIPE IS ADEQUATELY SUPPORTED THROUGHOUT ITS LENGTH.

2. SPACERS AT EACH END SHALL NOT BE FURTHER THAN 6" FROM THE END OF CASING REGARDLESS OF SIZE OF CASING AND CARRIER PIPE OR TYPE OF SPACER USED.

D. FOR PIPE WITH MECHANICAL JOINTS, FLANGES OR BELL AND SPIGOT JOINTS, CASING SPACERS SHALL BE INSTALLED WITHIN ONE FOOT ON EACH SIDE OF THE BELL OR FLANGE AND ONE IN THE CENTER OF THE JOINT WHEN 18 TO 20 FOOT LONG JOINTS ARE USED. MAXIMUM SPACING FOR SPACERS IS 12 FEET.

E. THE ENDS OF THE CASING PIPE SHALL BE SEALED WITH AN APS MODEL AC WRAP SEAL WITH STAINLESS STEEL BAND.

F. CASING PIPE SHALL BE 1/4" NEW STEEL PIPE PAINTED OUTSIDE & INSIDE WITH 2 COATS OF COAL TAR EPOXY.

THIS DOCUMENT IS FOR INTERIM REVIEW AND IS NOT INTENDED FOR CONSTRUCTION, BIDDING, PERMIT OR OTHER UNAUTHORIZED PURPOSES. THESE DOCUMENTS/PLANS WERE AUTHORIZED TO BE RELEASED:

BY: ENRIQUE VALDEZ P.E.
LICENSE NO.: 111750 DATE: 6/24/16

ISSUES / REVISIONS

DATE	NO.	DESCRIPTION	BY

WEBB COUNTY, TEXAS
COLORADO ACRES RO PHASE 1 PROJECT

WATER DETAILS (2 OF 2)

LNV engineers | architects | surveyors
TBPE FIRM NO. F-366
TBPLS FIRM NO. 10126500
6010 McPHERSON SUITE 110
LAREDO, TX 78041
PH. (956) 462-5511
WWW.LNVINC.COM

DRAWING NO. 10 of 13

DRAWN BY:	E.F.
CHECKED BY:	E.V.
APPROVED BY:	E.V.
JOB NO:	160149

\\NRLSTORAGE\Projects\Colorado Acres\10 MISC DETAILS.dwg
Friday, June 24, 2016, 3:15pm

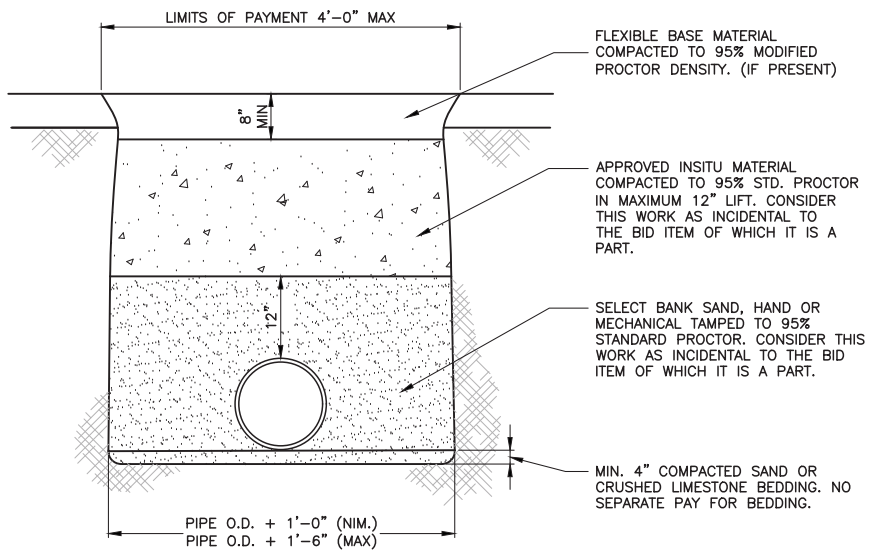

TYPICAL BACKFILL FOR BASE & PARALLEL TO SHOULDER

SCALE: N.T.S.

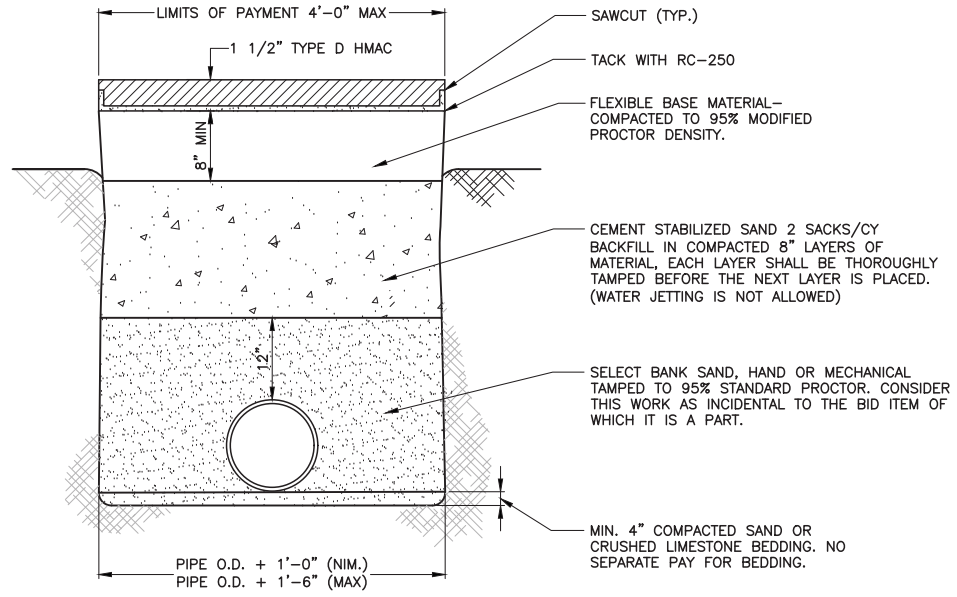

NOTE: CONTRACTOR SHALL MAINTAIN 20' DRIVING LANE ACROSS TRENCH UNTIL FINAL PAVEMENT IS INSTALLED

TYPICAL BACKFILL FOR PAVEMENT

SCALE: N.T.S.

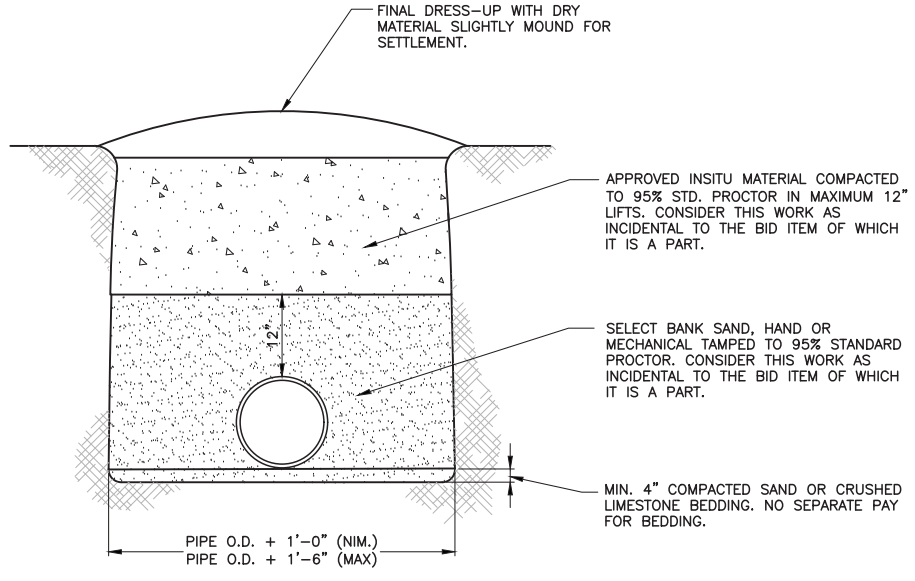

TYPICAL BACKFILL FOR UNPAVED AREAS

SCALE: N.T.S.

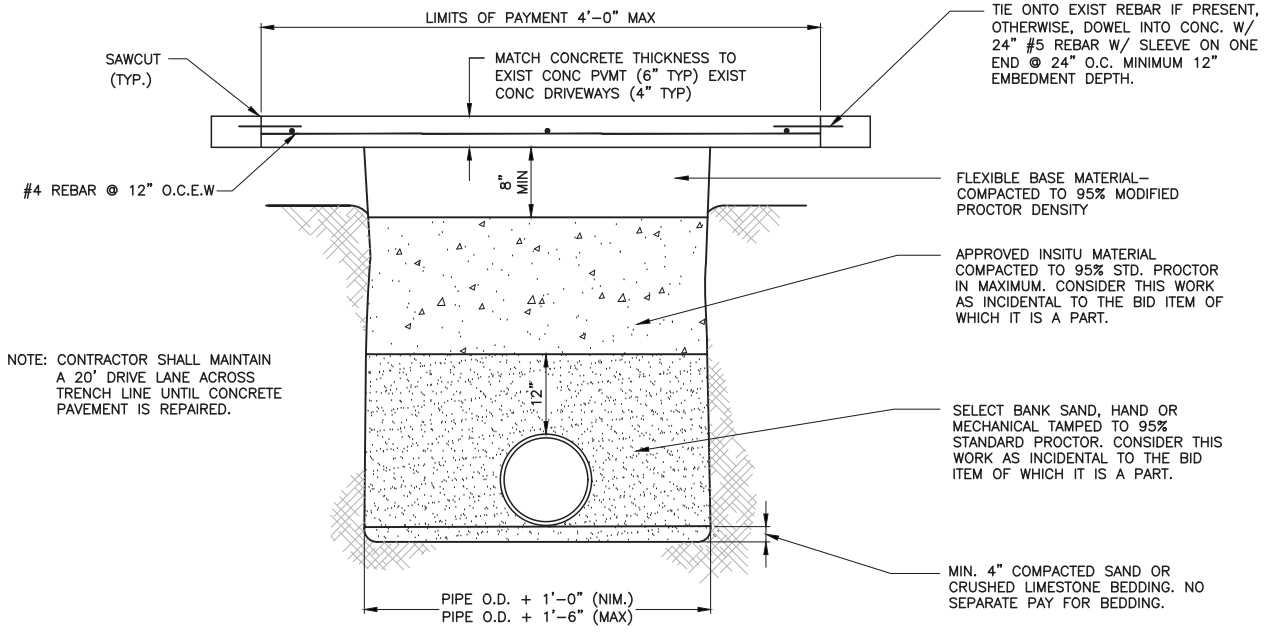

NOTE: CONTRACTOR SHALL MAINTAIN A 20' DRIVE LANE ACROSS TRENCH LINE UNTIL CONCRETE PAVEMENT IS REPAIRED.

TYPICAL BACKFILL FOR CONCRETE PAVEMENT & DRIVEWAYS

SCALE: N.T.S.

THIS DOCUMENT IS FOR INTERIM REVIEW AND IS NOT INTENDED FOR CONSTRUCTION, BIDDING, PERMIT OR OTHER UNAUTHORIZED PURPOSES. THESE DOCUMENTS/PLANS WERE AUTHORIZED TO BE RELEASED:
BY: ENRIQUE VALDEZ P.E.
LICENSE NO.: 111750 DATE: 6/24/16

ISSUES / REVISIONS

NO.	DATE	DESCRIPTION	BY

WEBB COUNTY, TEXAS
COLORADO ACRES RO PHASE 1 PROJECT

BACKFILL DETAILS

TBPE FIRM NO. F-366
TBPLS FIRM NO. 101105500
LNV engineers | architects | surveyors
PH. (956) 462-5511
6010 McPHERSON, SUITE 110
LAREDO, TX 78041
WWW.LNVINC.COM

DRAWING NO. 11 of 13

DRAWN BY:	E.F.
CHECKED BY:	E.V.
APPROVED BY:	E.V.
JOB NO:	160149

\\MRLSTORAGE\Projects\Colorado Acres\7 BACKFILL DETAILS.dwg
Friday, June 24, 2016, 3:15pm

DISCLAIMER:
The use of this standard is governed by the "Texas Engineering Practice Act". No warranty of any kind is made by TxDOT for any purpose whatsoever. TxDOT assumes no responsibility for the conversion of this standard to other formats or for incorrect results or damages resulting from its use.

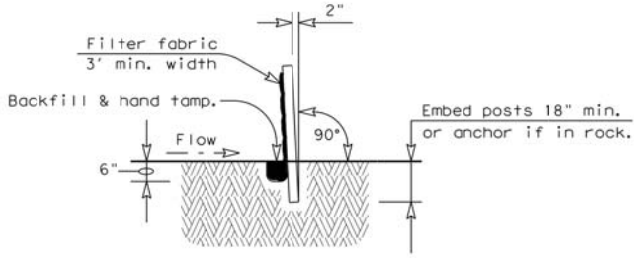

SECTION A-A

GENERAL NOTES

1. The guidelines shown hereon are suggestions only and may be modified by the Engineer.

PLAN SHEET LEGEND

Sediment Control Fence —— (SCF) ——

SEDIMENT CONTROL FENCE USAGE GUIDELINES

A sediment control fence may be constructed near the downstream perimeter of a disturbed area along a contour to intercept sediment from overland runoff. A 2 year storm frequency may be used to calculate the flow rate to be filtered.

Sediment control fence should be sized to filter a max. flow through rate of 100 GPM/FT^2. Sediment control fence is not recommended to control erosion from a drainage area larger than 2 acres.

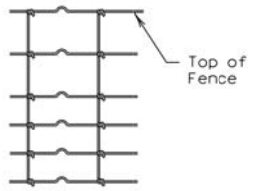

Galv. Hinge joint knot woven mesh (12.5 Ga. Min.) requires a minimum of five horizontal wires spaced at a max.12 inches apart and all vertical wires spaced at a max. 12 inches apart.

Hinge Joint Knot Woven Mesh (Option)

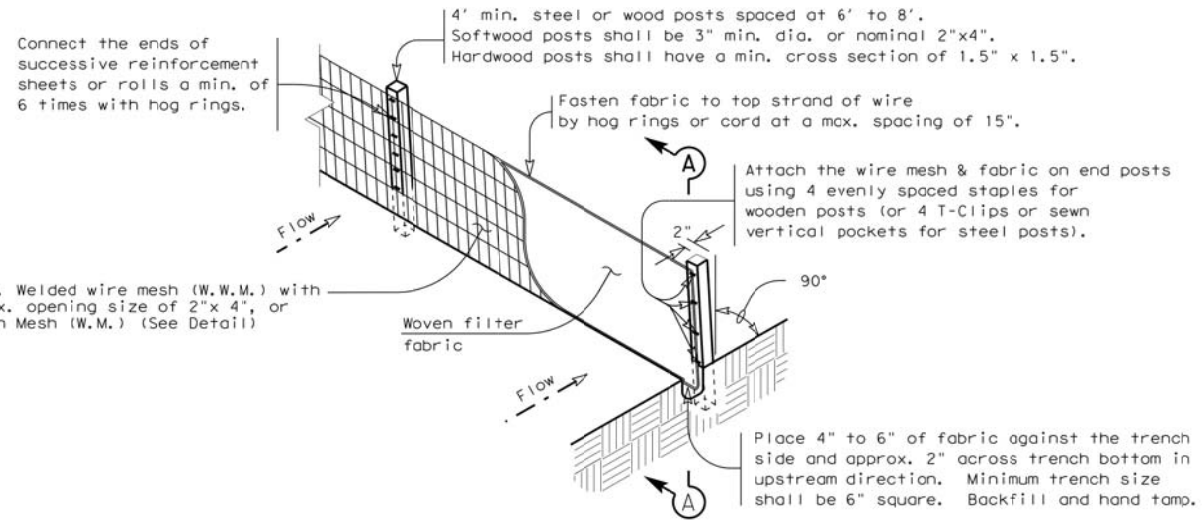

TEMPORARY SEDIMENT CONTROL FENCE

(SCF)

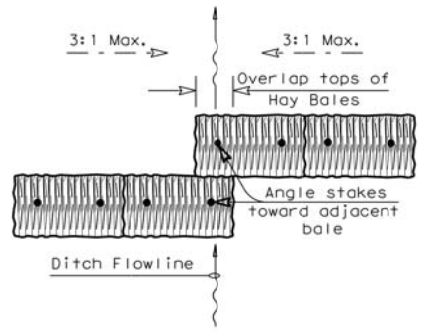

PLAN VIEW

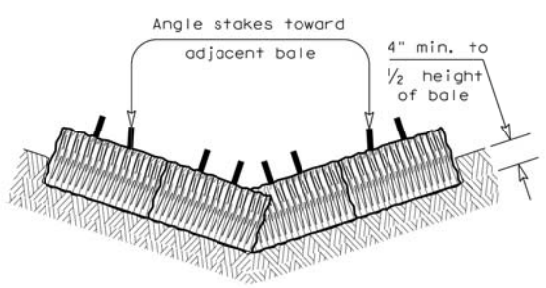

PROFILE VIEW

PLANS SHEET LEGEND

Baled Hay —— (BH) ——

BALED HAY USAGE GUIDELINES

A Baled Hay installation may be constructed near the downstream perimeter of a disturbed area along a contour to intercept sediment from overland runoff. A two year storm frequency may be used to calculate the flow rate to be filtered. The installation should be sized to filter a maximum flow thru rate of 5 GPM/FT^2 of cross sectional area. Baled hay may be used at the following locations:

1. Where the runoff approaching the baled hay flows over disturbed soil for less than 100'. If the slope of the disturbed soil exceeds 10%, the length of slope upstream the baled hay should be less than 50'.
2. Where the installation will be required for less than 3 months.
3. Where the contributing drainage area is less than ½ acre.

For Baled Hay installations in small ditches, the additional following considerations apply:

1. The ditch sideslopes should be graded as flat as possible to maximize the drainage flowrate thru the hay.
2. The ditch should be graded large enough to contain the overtopping drainage when sediment has filled to the top of the baled hay.

Bales should be replaced usually every 2 months or more often during wet weather when loss of structural integrity is accelerated.

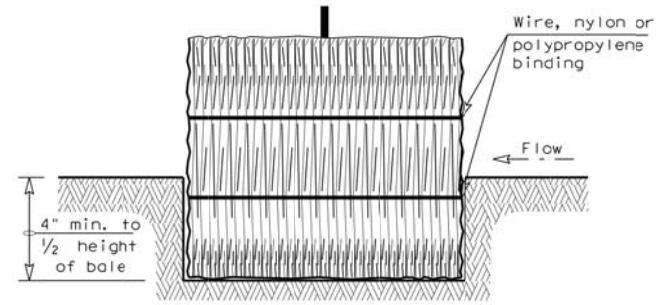

SECTION B-B

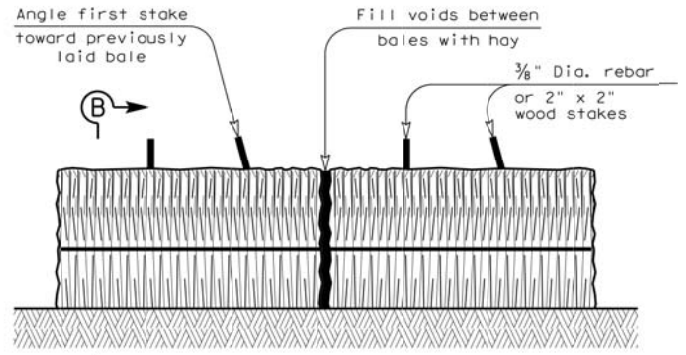

BALED HAY FOR EROSION CONTROL

(BH)

GENERAL NOTES

1. Hay bales shall be a minimum of 30" in length and weigh a minimum of 50 Lbs.
2. Hay bales shall be bound by either wire or nylon or polypropylene string. The bales shall be composed entirely of vegetative matter.
3. Hay bales shall be embedded in the soil a minimum of 4" and where possible ½ the height of the bale.
4. Hay bales shall be placed in a row with ends tightly abutting the adjacent bales. The bales shall be placed with bindings parallel to the ground.
5. Hay bales shall be securely anchored in place with ⅜" Dia. rebar or 2" x 2" wood stakes, driven through the bales. The first stake shall be angled towards the previously laid bale to force the bales together.
6. The guidelines shown hereon are suggestions only and may be modified by the Engineer.

Texas Department of Transportation — Design Division Standard

TEMPORARY EROSION, SEDIMENT AND WATER POLLUTION CONTROL MEASURES

FENCE & BALED HAY

EC(1)-09

FILE: ec109.dgn	DN: TxDOT	CK: AM	DW: TV	CK: BD
© TxDOT June 1993	CONT	SECT	JOB	HIGHWAY
REVISIONS				
	DIST	COUNTY		SHEET NO.

DATE:
FILE:

\\ARLSTORAGE\Projects\Colorado Acres\8 STORM WATER POLLUTION PREVENTION (1 OF 2).dwg
Friday, June 24, 2016, 3:15pm

ISSUES / REVISIONS

NO.	DATE	DESCRIPTION	BY

THIS DOCUMENT IS FOR INTERIM REVIEW AND IS NOT INTENDED FOR CONSTRUCTION, BIDDING, PERMIT OR OTHER UNAUTHORIZED PURPOSES. THESE DOCUMENTS/PLANS WERE AUTHORIZED TO BE RELEASED:

BY: ENRIQUE VALDEZ P.E.
LICENSE NO.: 111750 DATE: 6/24/16

WEBB COUNTY, TEXAS
COLORADO ACRES RO PHASE 1 PROJECT

STORM WATER POLLUTION PREVENTION (1 OF 2)

TBPE FIRM NO. F-366
TBPLS FIRM NO. 10126500
LNV engineers | architects | surveyors
PH. (956) 462-5511
WWW.LNVINC.COM
6010 MCPHERSON, SUITE 110
LAREDO, TX 78041

DRAWING NO. 12 of 13

DRAWN BY:	E.F.
CHECKED BY:	E.V.
APPROVED BY:	E.V.
JOB NO:	160149

DISCLAIMER:
The use of this standard is governed by the "Texas Engineering Practice Act". No warranty of any kind is made by TxDOT for any purpose whatsoever. TxDOT assumes no responsibility for the conversion of this standard to other formats or for incorrect results or damages resulting from its use.

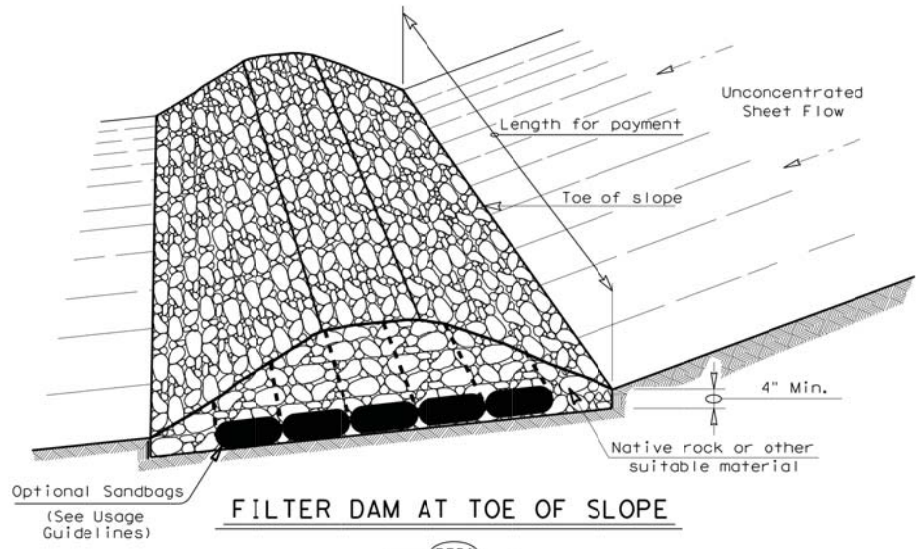

FILTER DAM AT TOE OF SLOPE

RFD1
TYPE 1

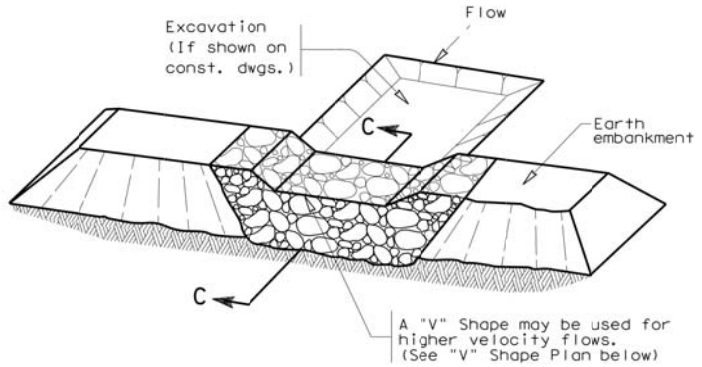

FILTER DAM AT SEDIMENT TRAP

RFD1 OR RFD2
TYPE 1 OR TYPE 2

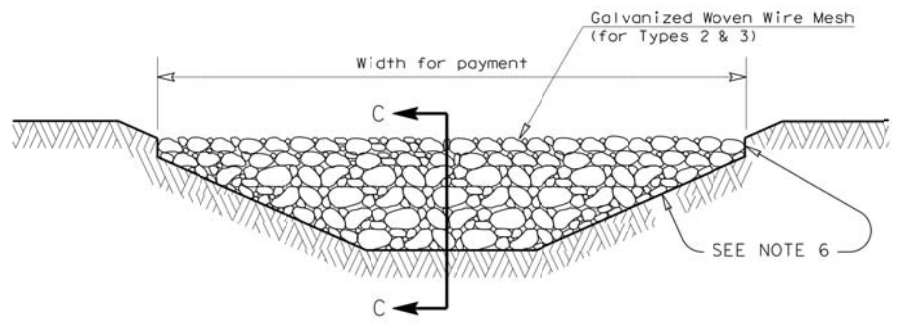

FILTER DAM AT CHANNEL SECTIONS

RFD1 OR RFD2 OR RFD3
TYPE 1 OR TYPE 2

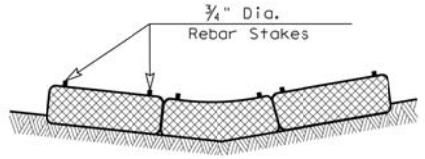

SECTION B-B

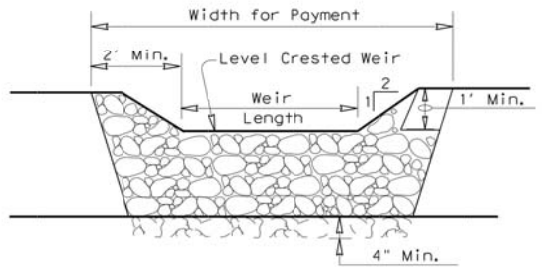

PROFILE

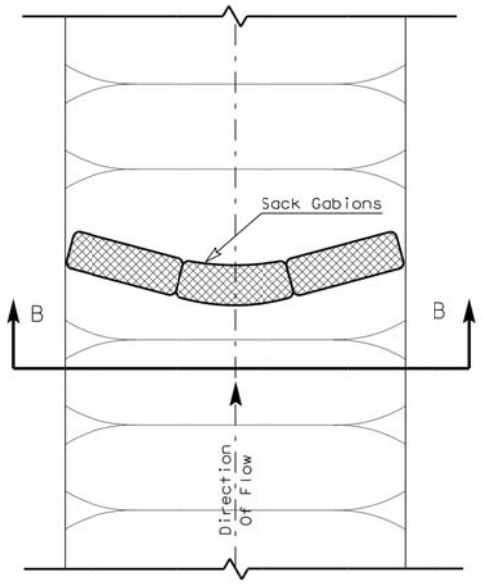

PLAN VIEW

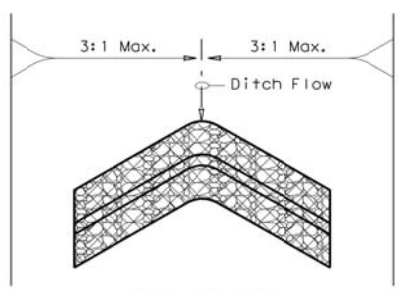

"V" SHAPE
(Plan View)

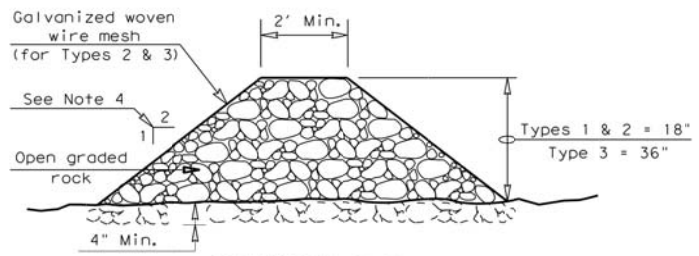

SECTION C-C

PLANS SHEET LEGEND

Type 1 Rock Filter Dam — RFD1
Type 2 Rock Filter Dam — RFD2
Type 3 Rock Filter Dam — RFD3

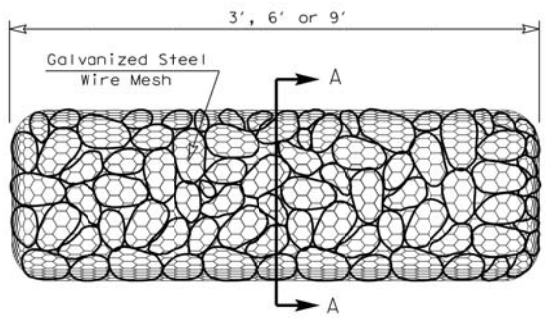

TYPE 4 (SACK GABIONS)

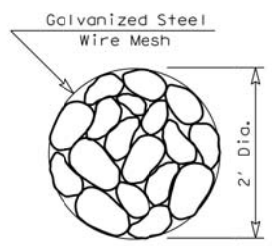

SECTION A-A

ROCK FILTER DAM USAGE GUIDELINES

Rock Filter Dams should be constructed downstream from disturbed areas to intercept sediment from overland runoff and/or concentrated flow. The dams should be sized to filter a maximum flow through rate of 60 GPM/FT^2 of cross sectional area. A 2 year storm frequency may be used to calculate the flow rate.

Type 1 (18" high with no wire mesh): Type 1 may be used at the toe of slopes, around inlets, in small ditches, and at dike or swale outlets. This type of dam is recommended to control erosion from a drainage area of 5 acres or less. Type 1 may not be used in concentrated high velocity flows (approx. 8 Ft/Sec or more) in which aggregate wash out may occur. Sandbags may be used at the embedded foundation (4" deep min.) for better filtering efficiency of low flows if called for on the plans or directed by the Engineer.

Type 2 (18" high with wire mesh): Type 2 may be used in ditches and at dike or swale outlets.

Type 3 (36" high with wire mesh): Type 3 may be used in stream flow and should be secured to the stream bed.

Type 4 (Sack gabions): Type 4 May be used in ditches and smaller channels to form an erosion control dam.

GENERAL NOTES

1. If shown on the plans or directed by the Engineer, filter dams should be placed near the toe of slopes where erosion is anticipated, upstream and/or downstream at drainage structures, and in roadway ditches and channels to collect sediment.
2. Materials (aggregate, wire mesh, sandbags, etc.) shall be as indicated by the specification for "Rock Filter Dams for Erosion and Sedimentation Control".
3. The rock filter dam dimensions shall be as indicated on the SW3P plans.
4. Side slopes should be 2:1 or flatter. Dams within the safety zone shall have sideslopes of 6:1 or flatter.
5. Maintain a minimum of 1' between top of rock filter dam weir and top of embankment for filter dams at sediment traps.
6. Filter dams should be embedded a minimum of 4" into existing ground.
7. The sediment trap for ponding of sediment laden runoff shall be of the dimensions shown on the plans.
8. Rock filter dam types 2 & 3 shall be secured with 20 gauge galvanized woven wire mesh with 1" diameter hexagonal openings. The aggregate shall be placed on the mesh to the height & slopes specified. The mesh shall be folded at the upstream side over the aggregate and tightly secured to itself on the downstream side using wire ties or hog rings. In stream use the mesh should be secured or staked to the stream bed prior to aggregate placement.
9. Sack Gabions should be staked down with ¾" dia. rebar stakes.
10. Flow outlet should be onto a stabilized area (vegetation, rock, etc.).
11. The guidelines shown hereon are suggestions only and may be modified by the Engineer.

Texas Department of Transportation — Design Division Standard

TEMPORARY EROSION, SEDIMENT AND WATER POLLUTION CONTROL MEASURES

ROCK FILTER DAMS

EC(2)-93

FILE: ec293.dgn	DN: TxDOT	CK: HEJ	DW: BD	CK:
©TxDOT June 1993	CONT	SECT	JOB	HIGHWAY
REVISIONS	DIST	COUNTY		SHEET NO.

DATE:
FILE:

\\RFSTORAGE\Projects\Colorado Acres\9 STORM WATER POLLUTION PREVENTION (2 OF 2).dwg
Friday, June 24, 2016, 3:18pm

THIS DOCUMENT IS FOR INTERIM REVIEW AND IS NOT INTENDED FOR CONSTRUCTION, BIDDING, PERMIT OR OTHER UNAUTHORIZED PURPOSES. THESE DOCUMENTS/PLANS WERE AUTHORIZED TO BE RELEASED:
BY: ENRIQUE VALDEZ P.E.
LICENSE NO.: 111750 DATE: 6/24/16

ISSUES / REVISIONS

NO.	DATE	DESCRIPTION	BY

WEBB COUNTY, TEXAS
COLORADO ACRES RO PHASE 1 PROJECT

STORM WATER POLLUTION PREVENTION (2 OF 2)

TBPE FIRM NO. F-366
TBPLS FIRM NO. 10126500
engineers | architects | surveyors
PH. (956) 462-5511
6010 McPHERSON, SUITE 110
LAREDO, TX 78041
WWW.LNVINC.COM

DRAWING NO. 13 of 13

DRAWN BY:	E.F.
CHECKED BY:	E.V.
APPROVED BY:	E.V.
JOB NO:	160149